WESTERBEKE WORLDWIDE

OPERATORS MANUAL

MARINE GASOLINE GENERATORS

22.5 SBEG and SBEGA - 60Hz
18.7 SBEG and SBEGA - 50Hz

20.0 SBEG and SBEGA - 60Hz
16.0 SBEG and SBEGA - 50Hz

Single and Three Phase

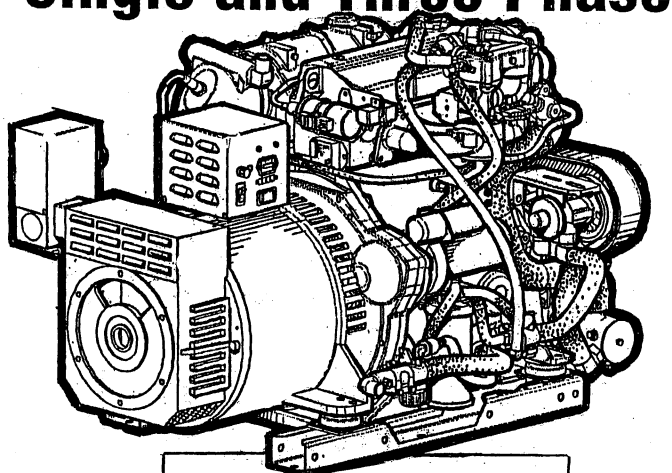

PUBLICATION NO. 049800
REVISION 6 JANUARY 2014

WESTERBEKE™ GENERATORS NMMA

EFI Low-CO

CALIFORNIA PROPOSITION 65 WARNING

Exhaust gas from diesel and gasoline engines (and some of its constituents) are known to the State of California to cause cancer, birth defects, and other reproductive harm.

⚠ WARNING:

Exhaust gasses contain Carbon Monoxide, an odorless and colorless gas. Carbon Monoxide is poisonous and can cause unconsciousness and death. Symptoms of Carbon Monoxide exposure can include:

- ***Dizziness***
- ***Nausea***
- ***Headache***
- ***Weakness and Sleepiness***
- ***Throbbing in Temples***
- ***Muscular Twitching***
- ***Vomiting***
- ***Inability to Think Coherently***

IF YOU OR ANYONE ELSE EXPERIENCE ANY OF THESE SYMPTOMS, GET OUT INTO THE FRESH AIR IMMEDIATELY. If symptoms persist, seek medical attention. Shut down the unit and do not restart until it has been inspected and repaired.

A WARNING DECAL is provided by WESTERBEKE and should be fixed to a bulkhead near your engine or generator.

WESTERBEKE also recommends installing CARBON MONOXIDE DETECTORS in the living/sleeping quarters of your vessel. They are inexpensive and easily obtainable at your local marine store.

WESTERBEKE™ GENERATORS EFI Low-CO

Low Carbon Monoxide Emissions

Gasoline with an ETHANOL content higher than 10% (E10) is not allowed and may void warranty.

WESTERBEKE™

Engines & Generators

SAFETY INSTRUCTIONS

INTRODUCTION

Read this safety manual carefully. Most accidents are caused by failure to follow fundamental rules and precautions. Know when dangerous conditions exist and take the necessary precautions to protect yourself, your personnel, and your machinery.
The following safety instructions are in compliance with the American Boat and Yacht Council (ABYC) standards.

PREVENT ELECTRIC SHOCK

⚠ WARNING: ***Do not touch AC electrical connections while engine is running. Lethal voltage is present at these connections!***

- Do not operate this machinery without electrical enclosures and covers in place.
- Shut off electrical power before accessing electrical equipment.
- Use insulated mats whenever working on electrical equipment.
- Make sure your clothing and skin are dry, not damp (particularly shoes) when handling electrical equipment.
- Remove wristwatch and all jewelry when working on electrical equipment.
- Do not connect utility shore power to vessel's AC circuits, except through a ship-to-shore double throw transfer switch. Damage to vessel's AC generator may result if this procedure is not followed.
- Electrical shock results from handling a charged capacitor. Discharge capacitor by shorting terminals together.

PREVENT BURNS — HOT ENGINE

⚠ WARNING: ***Do not touch hot engine parts or exhaust system components. A running engine gets very hot!***

- Always check the engine coolant level at the coolant recovery tank.

⚠ WARNING: ***Steam can cause injury or death!***

- In case of an engine overheat, allow the engine to cool before touching the engine or checking the coolant.

PREVENT BURNS — FIRE

⚠ WARNING: ***Fire can cause injury or death!***

- Prevent flash fires. Do not smoke or permit flames or sparks to occur near the throttle body, injector, filter, fuel pump, or other potential sources of spilled fuel or fuel vapors. Use a suitable container to catch all fuel when removing the fuel lines, fuel filters, or other fuel system components.
- Do not operate with a Coast Guard Approved flame arrester removed. Backfire can cause severe injury or death.
- Do not operate the engine with the air intake (silencer), or flame arrester/filter screen removed.
- Do not smoke or permit flames or sparks to occur near the fuel system. Keep the compartment and the engine/generator clean and free of debris to minimize the chances of fire. Wipe up all spilled fuel and engine oil.
- Be aware — gasoline is highly flammable.

PREVENT BURNS — EXPLOSION

⚠ WARNING: ***Explosions from fuel vapors can cause injury or death!***

- Follow re-fueling safety instructions. Keep the vessel's hatches closed when fueling. Open and ventilate cabin after fueling. Check below for fumes/vapor before running the blower. Run the blower for four minutes before starting your engine.
- All fuel vapors are highly explosive. Use extreme care when handling and storing fuels. Store fuel in a well-ventilated area away from spark-producing equipment and out of the reach of children.
- Do not fill the fuel tank(s) while the engine is running.
- Shut off the fuel service valve at the engine when servicing the fuel system. Take care in catching any fuel that might spill. DO NOT allow any smoking, open flames, or other sources of fire near the fuel system or engine when servicing. Ensure proper ventilation exists when servicing the fuel system.
- Do not alter or modify the fuel system.
- Be sure all fuel supplies have a positive shutoff valve.
- Be certain fuel line fittings are adequately tightened and free of leaks.
- Make sure a fire extinguisher is installed nearby and is properly maintained. Be familiar with its proper use. Extinguishers rated ABC by the NFPA are appropriate for all applications encountered in this environment.

SAFETY INSTRUCTIONS

ACCIDENTAL STARTING

⚠ WARNING: ***Accidental starting can cause injury or death!***

- To prevent accidential starting when servicing the generator, turn OFF the DC breaker or remove the 8 amp fuse from the generators control panel.
- To prevent accidential starting of the generator. when servicing, turn the battery selector switch to the OFF position.
- Make certain all personnel are clear of the engine before starting.
- Make certain all covers, guards, and hatches are re-installed before starting the engine.

BATTERY EXPLOSION

⚠ WARNING: ***Battery explosion can cause injury or death!***

- Do not smoke or allow an open flame near the battery being serviced. Lead acid batteries emit hydrogen, a highly explosive gas, which can be ignited by electrical arcing or by lit tobacco products. Shut off all electrical equipment in the vicinity to prevent electrical arcing during servicing.
- Never connect the negative (–) battery cable to the positive (+) connection terminal of the starter solenoid. Do not test the battery condition by shorting the terminals together. Sparks could ignite battery gases or fuel vapors. Ventilate any compartment containing batteries to prevent accumulation of explosive gases. To avoid sparks, do not disturb the battery charger connections while the battery is being charged.
- Avoid contacting the terminals with tools, etc., to prevent burns or sparks that could cause an explosion. Remove wristwatch, rings, and any other jewelry before handling the battery.
- Always turn the battery charger off before disconnecting the battery connections. Remove the negative lead first and reconnect it last when disconnecting the battery.

BATTERY ACID

⚠ WARNING: ***Sulfuric acid in batteries can cause severe injury or death!***

- When servicing the battery or checking the electrolyte level, wear rubber gloves, a rubber apron, and eye protection. Batteries contain sulfuric acid, which is destructive. If it comes in contact with your skin, wash it off at once with water. Acid may splash on the skin or into the eyes inadvertently when removing electrolyte caps.

⚠ WARNING: ***Carbon monoxide (CO) is a deadly gas!***

- Ensure that the exhaust system is adequate to expel gases discharged from the engine. Check the exhaust system regularly for leaks and make sure the exhaust manifolds are securely attached and no warping exists. Pay close attention to the manifold, water injection elbow, and exhaust pipe fittings.
- Be sure the unit and its surroundings are well ventilated.
- In addition to routine inspection of the exhaust system, install a **carbon monoxide detector**. Consult your boat builder or dealer for installation of approved detectors.
- For additional information, refer to ABYC HT-22 (educational information on Carbon Monoxide).

⚠ WARNING: ***Carbon monoxide (CO) is an invisible odorless gas. Inhalation produces flu-like symptoms, nausea or death!***

- Do not use copper tubing in exhaust systems. Exhaust sulfur causes rapid deterioration of copper tubing resulting in exhaust/water leakage.
- Do not install exhaust outlet where exhaust can be drawn through portholes, vents, or air conditioners. If the engine exhaust discharge outlet is near the waterline. water could enter the exhaust discharge outlet and close or restrict the flow of exhaust. Avoid overloading the craft.
- Carbon monoxide gas is present in exhaust fumes. Some of the symptoms or signs of carbon monoxide inhalation or poisoning are:

Vomiting	Muscular twitching
Dizziness	Intense headache
Throbbing in temples	Weakness and sleepiness

AVOID MOVING PARTS

⚠ WARNING: ***Rotating parts can cause injury or death!***

- Do not service the engine while it is running. If a situation arises in which it is absolutely necessary to make operating adjustments, use extreme care to avoid touching moving parts and hot exhaust system components.

SAFETY INSTRUCTIONS

- Do not wear loose clothing or jewelry when servicing equipment; tie back long hair and avoid wearing loose jackets, shirts, sleeves, rings, necklaces or bracelets that could be caught in moving parts.
- Make sure all attaching hardware is properly tightened. Keep protective shields and guards in their respective places at all times.
- Do not check fluid levels or the drive belt's tension while the engine is operating.
- Do not allow any swimming or activity around or near the exhaust discharge opening for the generator while the generator is operating. Carbon Monoxide poisoning or death can occur.

HAZARDOUS NOISE

⚠ WARNING: ***High noise levels can cause hearing loss!***

- Never operate an engine without its muffler installed.
- Do not run the engine with the air intake (silencer) or flame arrester removed.
- Do not run engines for long periods with their enclosures open (when installed).

⚠ WARNING: ***Do not work on machinery when you are mentally or physically incapacitated by fatigue!***

OPERATORS MANUAL

Many of the preceding safety tips and warnings are repeated in your Operators Manual along with other cautions and notes to highlight critical information. Read your manual carefully, maintain your equipment, and follow all safety procedures.

GASOLINE ENGINE AND GENERATOR INSTALLATIONS

Preparations to install a gasoline engine or generator should begin with a thorough examination of the American Boat and Yacht Council's (ABYC) standards. These standards are from a combination of sources including the USCG and the NFPA.

Sections of the ABYC standards of particular interest are:

H-2 Ventilation for Boats using Gasoline
H-24 Gasoline Fuel Systems
P-1 Installation of Exhaust Systems
for Propulsion and Auxiliary Engines
P-4 Marine Inboard Engines and Transmissions
E11AC and DC Electrical Systems on Boats

All installations must comply with the Federal Code of Regulations (FCR).

www.abycinc.org

ABYC, NFPA AND USCG PUBLICATIONS FOR INSTALLING ENGINES AND GENERATORS

Read the following ABYC, NFPA and USCG publications for safety codes and standards. Follow their recommendations when installing your engine.

ABYC (American Boat and Yacht Council)
"Standards and Technical Information Reports for Small Craft"

Order from:

ABYC
613 Third Street, Suite 10
Annapolis, MD 21403

www.abycinc.org

NFPA - No.302 (National Fire Protection Association)
"Pleasure and Commercial Motor Craft"

Order from:

National Fire Protection Association
Battery March Park
Quincy, MA 02269

USCG (United States Coast Guard)
"regulatedions are under titles CFR33 and CFR46 of the Code of Regulations"

Order from:

U.S. Government Printing Office
Washington, D.C. 20404

INSTALLATION

When installing WESTERBEKE engines and generators it is important that strict attention be paid to the following information:

CODES AND REGULATIONS

Strict federal regulations, ABYC guidelines, and safety codes must be complied with when installing engines and generators in a marine environment.

SIPHON-BREAK

For installations where the exhaust manifold/water injected exhaust elbow is close to or will be below the vessel's waterline, provisions must be made to install a siphon-break in the raw water supply hose to the exhaust elbow. This hose must be looped a minimum of 20" above the vessel's waterline. ***Failure to use a siphon-break when the exhaust manifold/water injected exhaust elbow is near or below the loaded water line of the vessel will result in raw water damage to the engine and possible flooding of the vessel.***

If you have any doubt about the position of the water-injected exhaust elbow relative to the vessel's waterline under the vessel's various operating conditions, ***install a siphon-break.***

NOTE: *A siphon-break requires periodic inspection and cleaning to ensure proper operation. Failure to properly maintain a siphon-break can result in catastrophic engine damage. Consult the siphon-break manufacturer for proper maintenance.*

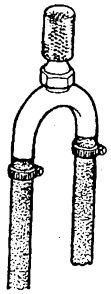

AVAILABLE FROM
YOUR WESTERBEKE
DEALER

SIPHON-BREAK WITH STAINLESS LOOP FOR 1" HOSE
PART NO. 044010

EXHAUST SYSTEM

The exhaust system's hose MUST be certified for marine use. Corrugated Marine Exhaust Hose is recommended. The use of this type of hose allows for extreme bends and turns without the need of additiinal fitting and clamps to accomplish these bends and turns .In this regard, a single length of corrugated exhaust hose can be used. The system MUST be designed to prevent the entry of water into the exhaust system under any sea conditions and at any angle of vessels heal.

A detailed Marine Installation Manual covering gasoline and diesel engines and generators is supplied with every unit sold. This manual is also available in pdf format on our website to download

Website: www.westerbeke.com

INSTALLATION

EMISSION-RELATED INSTALLATION INSTRUCTIONS

"Failing to follow these instructions when installing a certified engine in a piece of nonroad equipment violates federal law (40 CFR 1068.105(b)), subject to fines or other penalties as described in the Clean Air Act."

If your product is equipped with OBD (on board diagnostics) go to www.WESTERBEKE.COM and follow the free interface software download instructions specific to your engine to obtain and install the appropriate diagnostic software. The following is a list of OBD compliant products:

20.0 SBEGA
22.5 SBEGA
REFER TO THE DATA LOGGING PAGES IN THIS MANUAL.

To sample exhaust emissions on installed OBD compliant generators, gain access to the exhaust stream by removing the test port plug on the exhaust elbow. Be sure to reinstall the plug securely when testing is complete.

The Westerbeke generator that you purchased is certified for constant-speed operation only. The use of any Westerbeke product in any manner inconsistent with its intended use could be a violation of Federal Law.

"If you install the engine in a way that makes the engine's emission control information label hard to read during normal engine maintenance, you must place a duplicate label on the equipment, as described in 40 CFR 1068.105". Contact the factory for an additional engine emission control information label if needed to comply with this rule.

To comply with 40 CFR 1048.105 (a) "*Fuel line permeation.* For nonmetallic fuel lines, you must specify and use products that meet the Category 1 specifications for permeation in SAE J2260 (incorporated by reference in §1048.810)."

To comply with 40 CFR 1048.105 (c) "*Diurnal emissions.* Evaporative hydrocarbon emissions may not exceed 0.2 grams per gallon of fuel tank capacity when measured using the test procedures specified in §1048.501. Diurnal emission controls must continue to function during engine operation."

To comply with 40 CFR 1048.105 (d) "*Running loss.* Liquid fuel in the fuel tank may not reach boiling during continuous engine operation in the final installation at an ambient temperature of 30 °C. Note that gasoline with a Reid vapor pressure of 62 kPa (9 psi) begins to boil at about 53 °C at atmospheric pressure, and at about 60 °C for fuel tanks that hold pressure as described in §1048.245(e)(1)(i)".

To comply with 40 CFR 1048.245 (1) (i) "Use a tethered or self-closing gas cap on a fuel tank that stays sealed up to a positive pressure of 24.5 kPa (3.5 psi); however, they may contain air inlets that open when there is a vacuum pressure inside the tank. Nonmetal fuel tanks must also use one of the qualifying designs for controlling permeation emissions specified in 40 CFR 1060.240."

CARBON MONOXIDE "CO"/ SAFE-CO GENERATORS
IMPORTANT INFORMATION

DESCRIPTION

Carbon monoxide "CO" is a component of engine exhaust. It is a colorless, tasteless, odorless, lighter than air poisonous gas that can kill you without any warning. CO poisoning is one of the major safety risks associated with boating. It is a threat that must not be underestimated.

Several standards for CO have been published, expressed in parts per million "ppm" and hours of exposure:

Regulator	CO ppm	Exposure Hours
EPA	9	8
ACGIH	25	8
EPA	35	1
NIOSH	35	8
OSHA	50	8
ACGIH	125	0.5
NIOSH	200	0.0
NIOSH (IDLH)	1200	0.0

1200 ppm is the so-called IDLH concentration - IMMEDIATELY DANGEROUS TO LIFE AND HEALTH.

A city in California characterizes the effect of CO concentration this way:

Parts per Million	Responses
25	**Permissible exposure level, no apparent toxic symptoms.**
100	**No poisoning for long period. Allowable for several hours.**
200	**Should not be exposed above this level for any period of time. A possible mild frontal headache in two to three hours.**

Even though Westerbeke Safe-CO generators are designed to reduce normal levels of CO in the engine exhaust by approximately 99%, an exhaust leak of untreated exhaust would be extremely dangerous. For this reason it is extremely important to install a CO detector near the generator and to be sure it is always turned on and functioning properly. If this detector sounds, do not turn it off, assuming it is a false signal. You can not taste, smell, or otherwise detect CO. Leave the detector on, turn off all engines and generators, evacuate the boat leaving ports and hatches open, and seek professional help.

As soon as CO leaves the exhaust outlet, the level is subject to dilution in the open air. The closer a person is to the exhaust outlet, the higher the concentration of CO.

In a closed space, such as the engine compartment or underneath a stern swim platform, concentrations will potentially rise to the undiluted level emanating from the exhaust system due to a lack of fresh air to dilute the exhaust gas. Therefore, one should never rely on dilution of the exhaust to provide a margin of safety.

Westerbeke Safe-CO generators achieve reduction of CO by precise control control of the engine's air/fuel ration coupled with after treatment in a special catalyst. CO emissions are not the same for every model because each engine is different. Also, certain fuel system components are commonized across several engine models being adequate for some and extra-adequate for others, thus producing different CO levels for different models.

The fuel system which accomplishes the required precise air/fuel ratio control is comprised of many different components: purchased sub-assemblies, machined castings, sensors, electronics and others. Because of the extreme level of CO reduction, any variability in the functioning of any these components can and will cause variability of the CO output.

CO concentration also varies with load. Usually, but not always, the worst case CO concentration occurs at maximum load.

CARBON MONOXIDE "CO"/ LOW-CO GENERATORS
IMPORTANT INFORMATION

Catalyst performance will degrade over time. As the generator accumulates operating hours, CO concentrations will increase. **The catalyst must be replaced every 2,000 hours of engine operation.**

Verification of satisfactory CO levels must be done seasonally or each 1,000 hours (which ever occurs first). Verification involves actual sampling of exhaust gas with an appropriate CO analyzer.

There are two locations where exhaust gas can be sampled. Dry, but hot, exhaust can be sampled at the plugged tapped hole in the exhaust elbow intended for back pressure measurements. Measurements at this location may not be practical in all instances due to the high exhaust temperature, temperature limits of the analyzer, safety concerns over temperatures involved or the possibility of high levels of CO. The other location is the boat's exhaust outlet, which contains entrained cooling water (except dry stack exhaust systems). Only analyzers with probes should be used at this location and it is critical that the probe not ingest water. Probe-type analyzers have an air pump drawing a gas sample through the probe. As a result, they tend to ingest water when it is present. Be sure to aim the probe downwards with the opening pointed in the direction of the water flow and just out of the flow. Position the analyzer as high as possible with the tubing leading to the probe running continuously down-hill. Observe the usually translucent tubing between the probe and the analyzer and be sure no water is being ingested. If any water is ingested into the analyzer, it must be repaired or replaced and recalibrated.

When measuring CO at the exhaust outlet be aware of the ambient CO level by also measuring CO away from and upwind of the exhaust outlet, especially in marinas. the CO level at the exhaust will be influenced upwards by the ambient level.

Whenever taking the time to verify proper CO concentration from the exhaust with a CO analyzer, always take the opportunity to use the analyzer to "sniff" around the engine looking for CO from exhaust leaks. Pay close attention to the connection of the cylinder head to the exhaust manifold, the exhaust manifold to the water injected exhaust elbow, and all subsequent downstream exhaust components and hoses. Remember, exhaust gas that has not yet passed through the catalyst is raw, untreated exhaust and is very high in CO content.

Analyzers usually require periodic calibration. Follow the instructions that come with the analyzer very carefully regarding calibration.

The following are manufacturers that offer CO analyzers: Extech, TIF, Testo, TSI, Bacharach, Fluke, Monoxor, Fyrite, Zellwgwer Analytics, Industrial Scientific Corp, GFG, TPI, Teledyne and others. Westerbeke recommends analyzers with a probe connected to the analyzer by a length of transparent tubing. They are slightly more expensive than those with the sensor built into one end of the analyzer, but they allow you to sample the exhaust coming out of the boat's exhaust outlet.

☐ *Refer to MEASURING BACK PRESSURE, CO SENSORS ,and EXHAUST SYSTEM MAINTAINANCE., in the back pages of this manual.*

EMISSIONS

This genset meets the requirements of California's Exhaust Emissions Standards as stated on the nameplate.

California users of this genset should be aware that unauthorized modifications or replacement of fuel, exhaust, air intake, or speed control system components that affect engine emissions are prohibited. Unauthorized modification, removal or replacement of the engine label is prohibited.

Federal Emissions Compliance Period: The Federal Emissions Compliance Period referred to on the nameplate indicates the number of operating hours for which the engine has been shown to meet Federal Emissions requirements.

Catagory C= 250 hrs, B=500 hrs,m A =1000.hrs.

You should carefully review the Operators Manual and Installation Manual and any other information you receive with your genset. If you are unsure that the installation, use, maintenance, or service of your genset is authorized, you should seek approval from your WESTERBEKE dealer.

California genset users may use the table below as an aid in locating information related to the California Air Resources Board requirements for emissions control.

EMISSIONS CONTROL INFORMATION TABLE

Emissions Warranty Information	The California emissions control warranty statement is located in the same packet, if information as this manual when the genset is shipped from the factory.
Engine Fuel Requirements	The engine is certified to operate on unleaded gasoline. See *FUEL RECOMMENDATIONS.*
Engine Valve Adjustment	See *MAINTENANCE SCHEDULE.*
Engine Ignition Timing	See *MAINTENANCE SCHEDULE.*
Engine Lubricating Oil Requirements	See *ENGINE OIL RECOMMENDATIONS.*
Engine Adjustments	ECU.
Engine Emission Contol System	The engine emission control system consists of engine design and precision manufacture.
Catalyst	See *MAINTENANCE SCHEDULE.*
Oxygen Sensor	See *MAINTENANCE SCHEDULE.*
Back Pressure	See *MAINTENANCE SCHEDULE.*

TABLE OF CONTENTS

Safety and Emissions Data ..... V-VIII
20KW SBEG/22.5KW SBEG Parts Identification 2
Introduction 3,4
Fuel, Engine Oil and Engine Coolant 5
Preparations for Initial Start-Up 6
Operating Instructions 7
- Stop/Start Procedure 7
- Remote Panel/Wiring 7

Break-In Procedure/Daily Operation 8
Safety Shutdown Sensors/Switches 9
Maintenance Schedule 10
Cooling System 12
- Changing Coolant 12
- Thermostat 13
- Zinc Anode 13
- Heat Exchanger 13
- Raw Water Intake Strainer 14
- Raw Water Pump 14

Fuel System 15
- Gasoline/Water Separator and Filter 15
- Engine Fuel Filter 15
- Bleeding the Fuel System 16
- Electronic Fuel Injection (EFI) 17

Engine Lubrication Oil 18
- Changing the Engine Oil 18
- Replacing the Oil Filter 18

Oil Pressure 19
- Testing Oil pressure 19

Timing Belt Inspection/Installation 20
Engine Adjustments 22
- Spark Plugs 22
- Drive Belt Adjustment 22
- Valve Clearance Adjustment 23
- Ignition timing 23
- Torquing the Cylinder Head Bolts 23

Electronic Fuel Injection 24
Starter Motor 26
- Testing 26

Alternator Testing 27
- Alternator/ Testing 28
- Battery Care 29

Wiring Diagrams 30
Engine Troubleshooting (Chart) 34
Electrical Troubleshooting (Chart) 36
Software/Data Logging 37
SBEG Troubleshooting 31
Generator Information 41
SBEG - Single/Three Phase 42
Voltage Regulator Adjustments 43
AC Voltage Connections 44
AC Voltage Connections/Three Phase 45
SBEG Troubleshooting (Chart) 47
Internal Wiring Diagrams 48
Shore Power Transfer Switch 49
Engine/Generator Specifications 50
Lay-Up and Recommissioning 52
Measuring Exhaust Back-Pressure 53
Exhaust System Maintenance 54
Remote Oil Filter Assembly 55
Torque Specifications 56
Metric Conversions 57
Suggested Spare Parts 58

20KW SBEG/22.5KW SBEG PARTS IDENTIFICATION

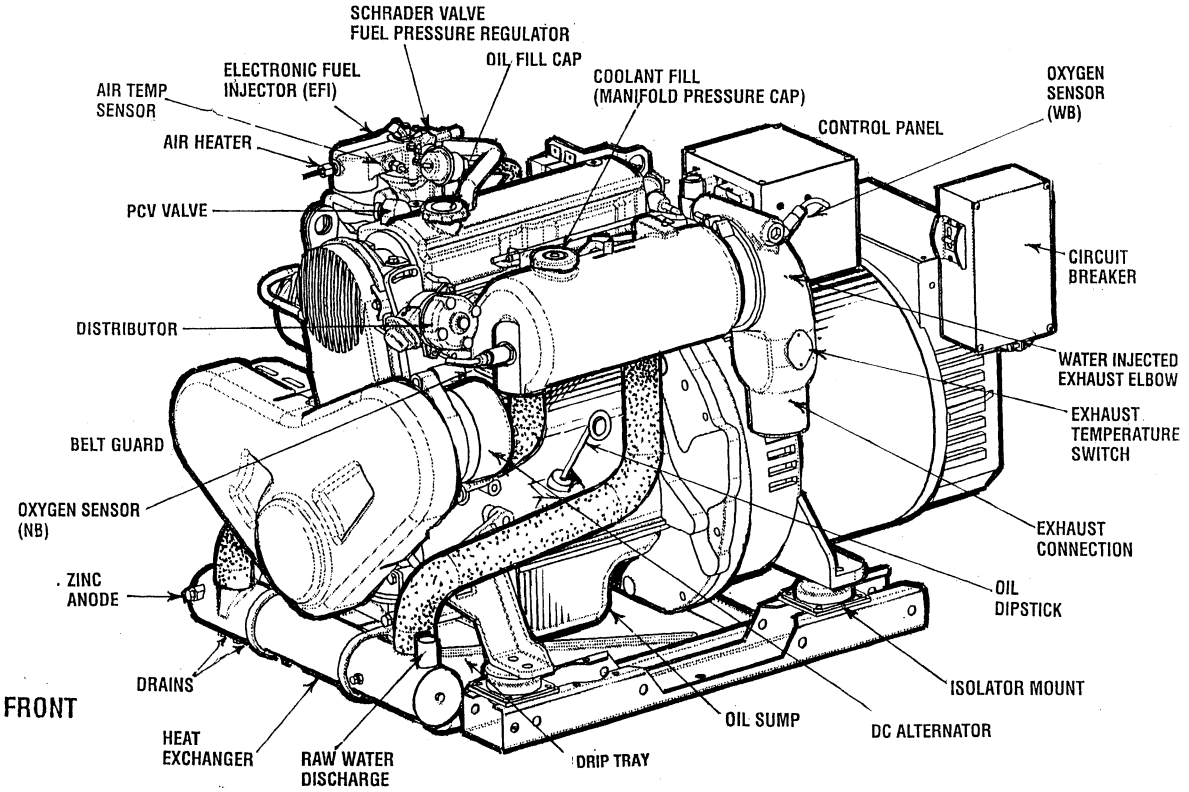

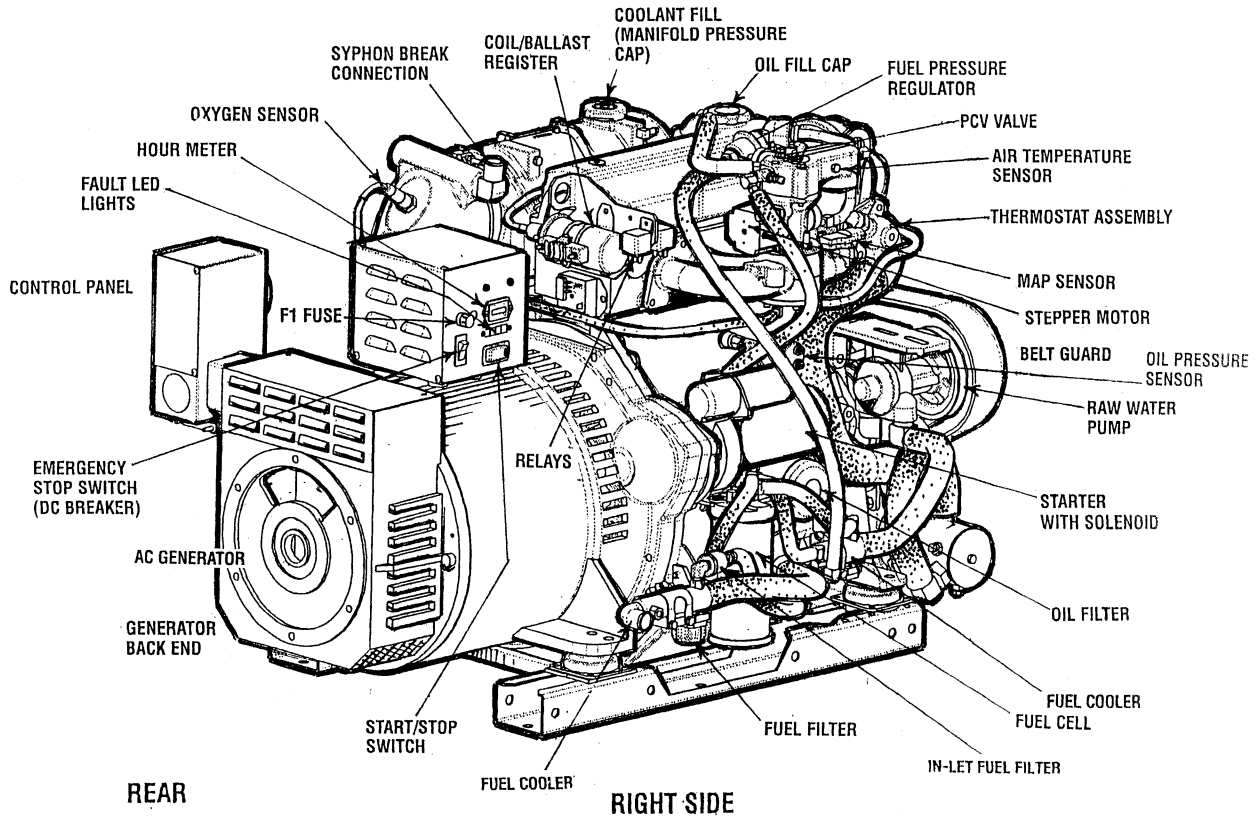

INTRODUCTION

This WESTERBEKE Generator is a product of WESTERBEKE's long years of experience and advanced technology. We take great pride in the superior durability and dependable performance of our engines and generators. Thank you for selecting WESTERBEKE.

In order to get the full use and benefit from your generator, it is important that you operate and maintain it correctly. This manual is designed to help you do this. Please read this manual carefully and observe all the safety precautions throughout. Should your generator require servicing, contact your nearest WESTERBEKE dealer for assistance.

This is your Operators Manual. A Parts Drawing is also provided and a Service Manual is available from your WESTERBEKE dealer. If you are planning to install this equipment yourself, contact your WESTERBEKE dealer for WESTERBEKE'S Installation Manual.

WARRANTY PROCEDURES

Your WESTERBEKE Warranty is included in a separate folder. If you have not received a customer identification card registering your warranty 60 days after submitting the warranty registry form, please contact the factory in writing with model information, including the unit's serial number and commission date.

WESTERBEKE
Engines & Generators

Customer Identification
WESTERBEKE OWNER
MAIN STREET
HOMETOWN, USA
Model Ser. #
Expires

PRODUCT SOFTWARE

Product software, (tech data, parts lists, manuals, brochures and catalogs), provided from sources other than WESTERBEKE are not within WESTERBEKE'S CONTROL.

WESTERBEKE customers should also keep in mind the time span between printings of WESTERBEKE product software and the unavoidable existence of earlier WESTERBEKE manuals. In summation, product software provided with WESTERBEKE products, whether from WESTERBEKE or other suppliers, must not and cannot be relied upon exclusively as the definitive authority on the respective product. It not only makes good sense but is imperative that appropriate representatives of WESTERBEKE or the supplier in question be consulted to determine the accuracy and currentness of the product software being consulted by the customer.

SERIAL NUMBER LOCATION

The generator serial number and model number are located on a decal on the generator housing. Take the time to enter the information on the blank decal provided below as this will provide a quick reference when seeking technical information and/or ordering repair parts.

SPECIFICATION	50 HZ.	60 HZ.
MODEL		
RPM		
KW		
KVA		
VOLTS		
AMPS		
ENG. HP		
ENG. SER. NO.		
GEN. SER. NO.		
PF/PHASE	/	
WIRES		
RATING		
INSUL. CLASS		
TEMP. RISE		
BATTERY		
C.I.D.		

Fill in the information for your reference.

Engine I.D. Plate

INTRODUCTION

ORDERING PARTS

Whenever replacement parts are needed, always provide the generator and engine model and serial numbers. In addition, include a complete part description and part number for each part needed, see the separately furnished Parts Drawing. Also insist upon WESTERBEKE packaged parts because *will fit* or generic parts are frequently not made to the same specifications as original equipment.

NOTES, CAUTIONS AND WARNINGS

As this manual takes you through the operating procedures, maintenance schedules, and troubleshooting of your generator, critical information will be highlighted by NOTES, CAUTIONS, and WARNINGS. An explanation follows:

NOTE: *An operating procedure essential to note.*

> ⚠ **CAUTION:** ***Procedures, which if not strictly observed, can result in the damage or destruction of the engine or generator.***

> ⚠ **WARNING:** ***Procedures, which if not properly followed, can result in personal injury or loss of life.***

NOTE: *A carbon monoxide warning decal has been provided by WESTERBEKE. Affix this decal in a visible location in the engine room.*

SPARES AND ACCESSORIES

Certain spare parts will be needed to support and maintain your WESTERBEKE generator or engine when cruising (see *SUGGESTED SPARE PARTS*). Often even simple items such as proper fuel and oil filters can be difficult to obtain along the way. WESTERBEKE will provide you with a suggested spares and accessories brochure to assist you in preparing an on-board inventory of the proper WESTERBEKE parts.

UNDERSTANDING THE GASOLINE ENGINE

The gasoline engine driving an AC generator is in many ways similar to a gasoline automobile engine. The cylinders are verticle in-line, and the engine's cylinder head has an overhead camshaft which is chain-driven.The engine utilizes a solid-state distributor which is horizontally mounted and camshaft driven. The engine incorporates a pressure type lubrication system, and a fresh water-cooled engine block which is thermostatically controlled. To a large degree, the generator's engine requires the same preventive maintenance that is required of a gasoline automobile engine. The most important factors to the generator's longevity are proper ventilation, maintenance of the fuel system, ignition system, and cooling system and generator back-end.

PROTECTING YOUR INVESTMENT

Care at the factory during assembly and thorough testing have resulted in a WESTERBEKE generator capable of many thousands of hours of dependable service. However the manufacturer cannot control how or where the generator is installed in the vessel or the manner in which the unit is operated and serviced in the field. This is up to the buyer/owner-operator.

NOTE: *Six important steps to ensure long generator life:*

- ***Proper engine and generator installation and alignment.***
- ***An efficient well-designed exhaust system that includes an anti-siphon break to prevent water from entering the engine.***
- ***Changing the engine oil and oil filters every 100 operating hours.***
- ***Proper maintenance of all engine and generator components according to the maintenance schedule in this manual.***
- ***Use clean, filtered unleaded fuel.***
- ***Winterize your engine according to the LAY-UP AND RECOMMISSIONING section in this manual.***

DIAGNOSTIC SOFTWARE

A Diagnostic Software Kit #055410 is available for purchase from your Westerbeke Distributor. The kit contains discs having Diagnostic Software EC10, CEC10,OBD1, EC20 and EC11. Also in this kit is an Interface Cable to connect between the unit's ECU and your laptop.

The software discs cover all our Low CO models, D-NET and Multi-Port models. The software is an important tool to use in monitoring system operation and in diadnosis of operating issues,

With some models, the software is needed to change Hertz operation of the engine and AC voltage output readings on the LCD Display in conjunction with AC voltage output changes in the field.

INSTALLATION MANUAL

Publication #043268 provides detailed information for installing generators.

CARBON MONOXIDE DETECTOR

WESTERBEKE recommends mounting a carbon monoxide detector in the vessels living quarters. **Carbon monoxide, even in small amounts, is deadly.**

The presence of carbon monoxide indicated an exhaust leak from the engine or generator or from the exhaust elbow/exhaust hose, or the fumes from a nearby vessel are entering your boat.

If carbon monoxide is present, ventilate the area with clean air and correct the problem immediately!

FUEL, ENGINE OIL AND ENGINE COOLANT

GASOLINE

⚠ CAUTION: ***Use unleaded 89 Octane gasoline or higher. Ethanol gasoline must not exceed E10 (10%). Gasoline with higher percentages of Ethanol are not acceptable for use in these models and can void the warranty.***

Gasoline with an ETHANOL content higher than 10% (E10) is not allowed and may void warranty.

When fueling, follow U.S. Coast Guard procedures, closing hatches and companionways to prevent fumes from entering the boat and cabins. Be sure to ventilate after fueling.

Care Of The Fuel Supply

Use only clean fuel! The clearance of the components in your fuel injection pump is very critical; invisible dirt particles which might pass through the filter can damage these finely finished parts. It is important to buy clean fuel, and keep it clean. The best fuel can be rendered unsatisfactory by careless handling or improper storage facilities. To assure that the fuel going into the tank for your engine's daily use is clean and pure, the following practice is advisable:

Purchase a well-known brand of fuel.

Install and regularly service a good, Coast Guard approved metal bowl type filter/water separator between the fuel tank and the engine.

ENGINE OIL

Use a heavy duty engine oil with an API classification of SJ, SL, SM or SN. Change the engine oil and filter after an initial 50 hours of engine break-in operation. Then follow the oil and filter change intervals as specified in the **MAINTENANCE SCHEDULE** in this manual.

An oil viscosity of SAE 15W-40 or SAE 10W-40 is recommended for this engine in all conditions and all seasons.

Westerbeke Corporation does not approve or disapprove the use of synthetic oils. If synthetic oils are used, engine break-in must be performed using conventional oil. Oil change intervals must be as listed in the **MAINTENANCE SCHEDULE** section of this manual and not be extended if synthetic oils are used.

NOTE: *The information above supersedes all previous statements regarding synthetic oil.*

ENGINE COOLANT

WESTERBEKE recommends a mixture of 50% antifreeze and 50% distilled water. Distilled water is free from the chemicals that can corrode internal engine surfaces.

The antifreeze performs double duty. It allows the engine to run at proper temperatures by transferring heat away from the engine to the coolant. It also lubricates and protects the cooling circuit from rust and corrosion. Use a good quality antifreeze that contains supplemental cooling additives (SCAs) that keep the antifreeze chemically balanced, crucial to long term protection.

The water and antifreeze should be premixed before being poured into the cooling circuit. WESTERBEKE recommends Prestone (pre-mixed)

NOTE: *Use the new environmentally-friendly, long lasting, antifreeze that is now available.*

A proper 50/50 mixture as recommended will protect the engine coolant to temperatures of -40°F.

COOLANT RECOVERY TANK

A coolant recovery tank kit is supplied with each generator. The purpose of this recovery tank is to allow for engine coolant expansion and contraction during engine operation. Some loss of coolant may occur as a result of evaporation and the effects of exhaust manifold working temperature.

NOTE: *This tank, with its short run of plastic hose, is best located at or above the level of the engine's manifold.*

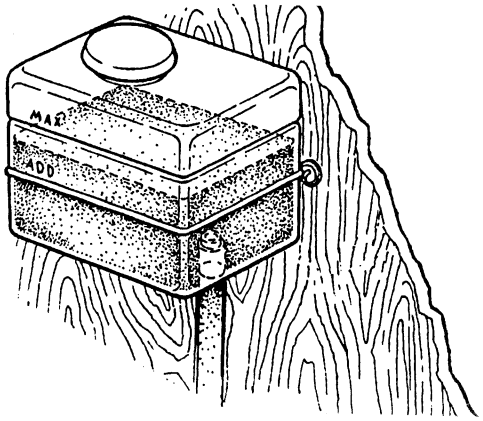

NOTE: *The engine compartment should have a gasoline fume detector/alarm properly installed and working.*

PREPARATIONS FOR INITIAL START-UP

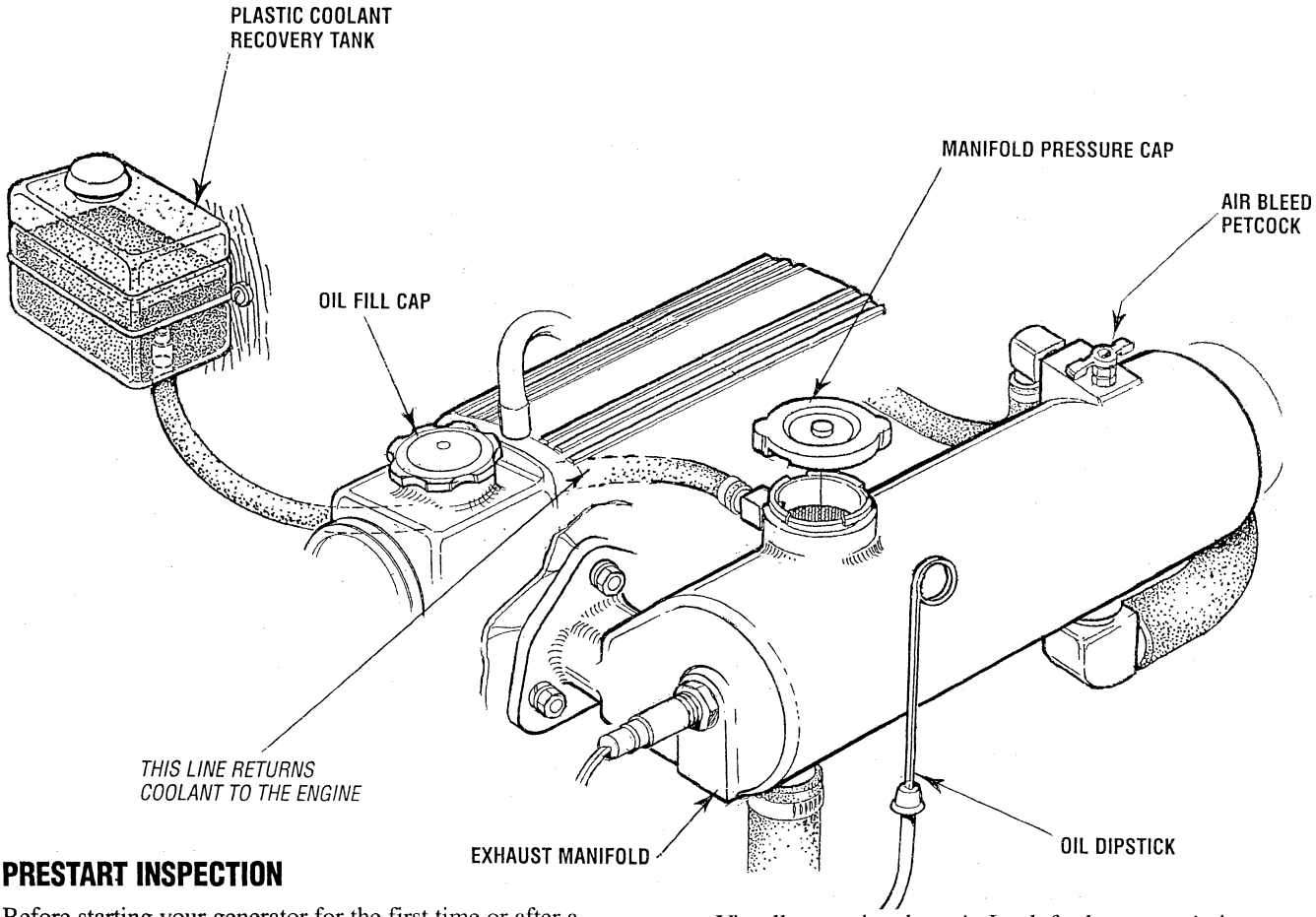

PRESTART INSPECTION

Before starting your generator for the first time or after a prolonged layoff, check the following items:

- Check the engine oil level: add oil to maintain the level at the full mark on the dipstick.
- Check the fuel supply and examine the fuel filter/separator bowls for contaminants.
- Check the DC electrical system. Inspect wire connections and battery cable connections.

  NOTE: *The starting battery **must** be totally dedicated to the generator and maintained by the generator's DC charging alternator and no other source.*
- Check the coolant level in both the plastic recovery tank and at the manifold.

  NOTE: *After the initial running of the generator, the air in the engine's cooling system will be purged to the coolant recovery tank. Open the air bleed petcock to ensure that the cooling system is purged of air. After shutdown and after the engine has cooled, the coolant from the recovery tank will be drawn into the engine's cooling system to replace the purged air.*

  Before subsequent operation of the generator, the engine's manifold should be topped off and the coolant recovery tank's level brought to 1/4 full.
- Visually examine the unit. Look for loose or missing parts, disconnected wires, unattached hoses, and check threaded connections. Search for any gasoline leaks.
- Check load leads for correct connections as specified in the wiring diagrams.
- Be sure no other generator or utility power is connected to the load lines.
- Be sure that in power systems with a neutral line that the neutral is properly grounded (or ungrounded) as the system requires, and that generator neutral is properly connected to the load neutral. In single phase systems an incomplete or open neutral can supply the wrong line-to-neutral voltage on unbalanced loads.
- Make certain the raw water thru-hull is open.

⚠ CAUTION: ***When starting the generator, it is recommended that all AC loads, especially large motors, be switched OFF until the engine has come up to speed and, in cold climates, starts to warm up. This precaution will prevent damage caused by unanticipated operation of the AC machinery and will prevent a cold engine from stalling.***

CONTOL PANEL - START/STOP PROCEDURE

TO START (DC CIRCUIT BREAKER ON)

Simply press the rocker switch to the start position and release (the switch will revert to its center position) the engine will **START** electronically. A **GREEN LED** on the switch will indicate the engine is running.

NOTE: *There is a few second delay while the ECU self-tests before the start switch responds.*

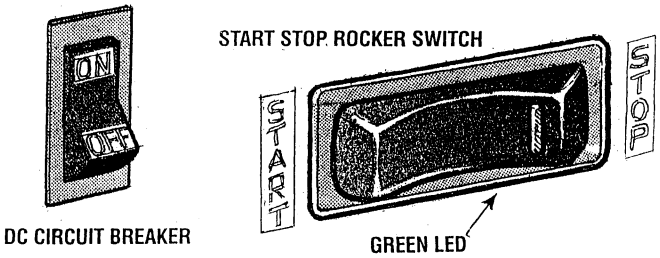

TO STOP

Press the rocker switch to the **STOP** position and release. The **GREEN LED** will go out indicating the engine has shut down.

CONTROL PANEL - OPERATING INSTRUCTIONS

GENERATOR CONTROL PANEL

The start/stop rocker switch is the only functional component on the generator control panel used to start and stop the generator.

The start/stop rocker switch is a three position switch with momentary contacts in the **(START)** and **(STOP)** position and a stationary contact function in the center **(NORMAL).** This position allows the generator to run once started and also enables the remote start/stop panel(s) to control the start/stop functions of the generator.

The **(START)** position starts the generator and once released reverts to the center position. The **(STOP)** position stops the engine in normal operation as well as in an emergency situation. This position is also used to prime the fuel system when necessary.

Failure to Start

The start cycle will automatically terminate after 6-8 seconds of cranking. Three crank cycles can be attempted before the ECU initiates a SPEED fault and prevents further crank cycle attempts. Invistigate the cause of this no-start, correct it and reset the ECU.

Prolonged cranking can result in the exhaust filling with water and backing into the engine.

The LED fault shut down display board has four separate LED lights to display to the operator the cause of the generators automatic shut down. The four LED displays are: low oil pressure, high engine operating temperature, high exhaust temperature and engine over-speed/under-speed (flashes).

Should the generator shut down from one of these faults, the fault LED will remain illuminated. To reset the LED, the DC breaker on the control box **must** be turned **OFF** and then back **ON**.

NOTE: *The CHECK ENGINE LED (SBEGA Models only) indicates a possible emissions control issue. Immediate action should be taken to troubleshoot and correct this problem.*

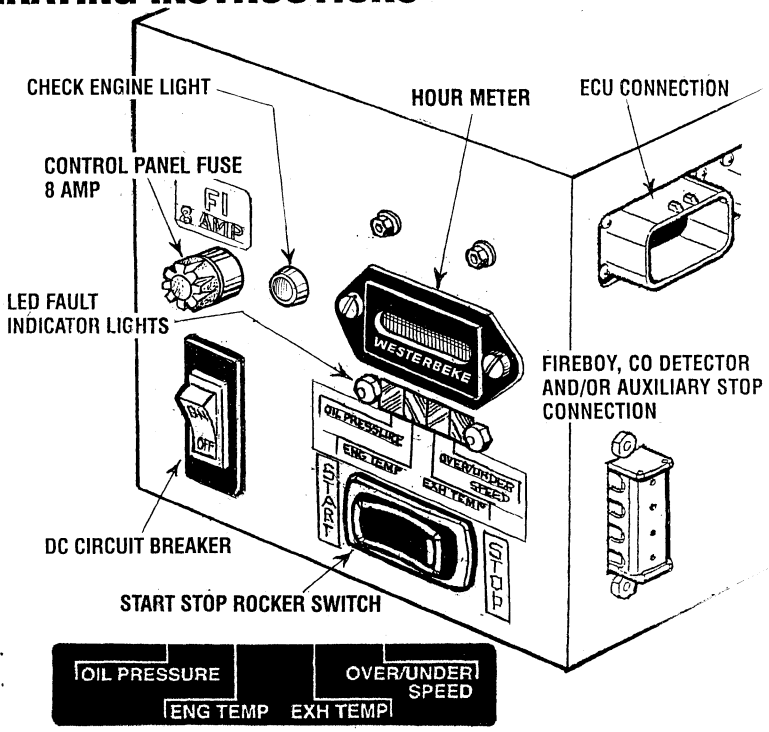

The Ext: Alarm indicates a faulty fire suppression circuit. By-pass the circuit to determine the fault (the fire suppression circuit must be closed when the circuit is running).

The **8 Amp Fuse** protects the Control Panel from High Ampeage or Short Circuit.

The **15 Amp DC Circuit Breaker** protects the K1, K2, K3 relays (closed circuit) ftom high amperage or short circuit.

Sometimes after servicing the fuel system or changing the fuel filter, air can accumulate in the fuel line or the throttle body and prevent starting. Schrader valves located on the high pressure pump module and the fuel rail are used to remove this trapped air. Refer to the *BLEEDING THE FUEL SYSTEM* in this manual.

Abnormal Stop

(Refer to the SAFETY SHUTDOWN SWITCHES)

REMOTE STOP/START PANEL
PN 049148

DESCRIPTION (with Fault Display)

A remote start/stop panel is available that allows for the engine/generator to be contolled from any location on the boat.

The remote panel connects to the main panel using an extension harness (maximum length of 100'). Once installed, the engine/generator can be started and stopped from either the remote or the main panel.

Starting (DC CIRCUIT BREAKER ON)

Simply press the rocker switch to the to the **START** position and release (the switch will revert to its center position) and the engine will **START** electronically. A **GREEN LED** on the switch will indicate the engine is running.

NOTE: *There is a few second delay while the ECU self-tests before the start switch responds.*

Stopping

Press the rocker switch to the **STOP** position and release. The **GREEN LED** will go out indicating the engine has shut down.

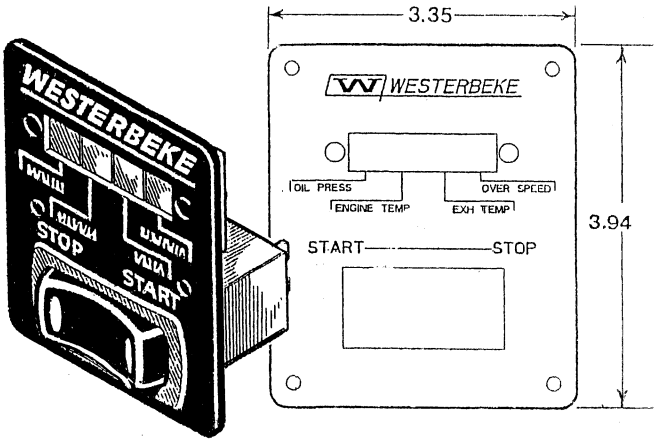

Refer to page 7 (*CONTROL PANEL START/STOP PROCEDURE*) for additional instructions and warnings.

REMOTE PANEL HARNESS: **15' Pn 049210**
30' Pn 049211
50' Pn 049667
75' Pn 049668
100' Pn 049669

Abnormal Stop

(Refer to the SAFETY SHUTDOWN SWITCHES)

REMOTE STOP/START PANEL WIRING DIAGRAM

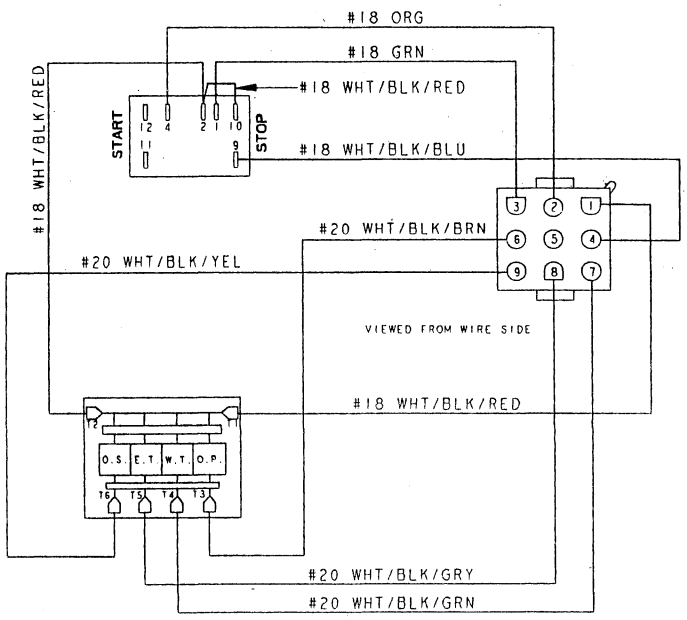

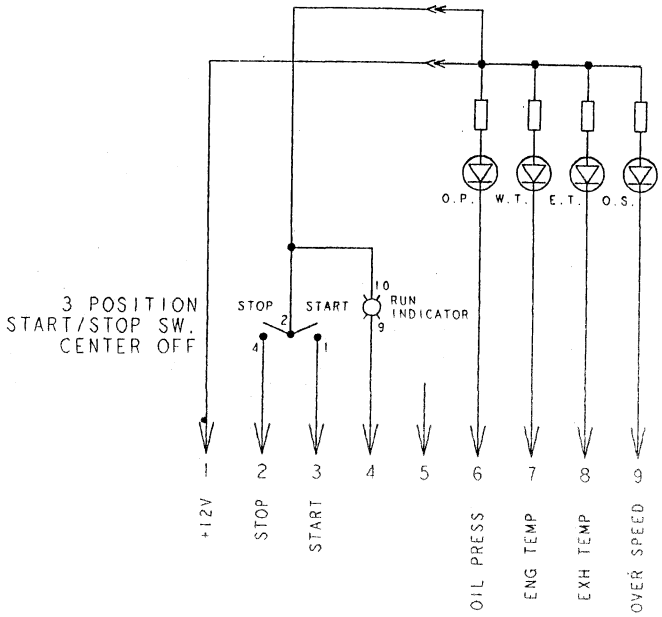

BREAK-IN PROCEDURE/THE DAILY OPERATION

BREAK-IN PROCEDURE

After the generator has been started, check for proper operation and then encourage a fast warm-up. Run the generator between 20% and 60% of full-load for the first 10 hours.

> ⚠ **CAUTION:** ***Do not attempt to break-in your generator by running without a load.***

After the first 10 hours of the generators operation, the load can be increased to the full-load rated output, then periodically vary the load.

Avoid overload at all times. An overload is signaled by smoky exhaust with reduced output voltage and frequency. Monitor the current being drawn from the generator and keep it within the generators rating. Since the generator operates at 1800 rpm to produce 60 hertz or 1500 rpm for 50 hertz, control of the generator's engine break-in is governed by the current drawn from the generator.

To protect against unintentional overloading of the generator, the generator's output leads should be routed through a circuit breaker that is rated at the rated output of the generator.

NOTE: *Be aware of motor starting loads and the high current drawn required for starting motors. The starting amperage drawn can be 3 to 5 times normal running amperage. See GENERATOR INFORMATION in this manual.*

CHECK LIST

Follow this check list each day before starting your generator.

- Record the hourmeter reading in your log (engine hours relate to the maintenance schedule).
- Visually inspect the generator for fuel, oil, or water leaks.
- Check the oil level (dipstick).
- Check the coolant level in the coolant recovery tank.
- Check your fuel supply.
- Check the starting batteries (weekly).
- Check drive belts for wear and proper tension (weekly).
- Check for abnormal noise such as knocking, vibration and blow-back sounds.
- Confirm exhaust smoke:
  When the engine is cold – white smoke.
  When the engine is warm – almost smokeless.
  When the engine is overloaded – some black smoke.

NOTE: *Some unstable running may occur in a cold engine. This condition should lessen as normal operating temperature is reached and loads are applied.*

> ⚠ **CAUTION:** ***Do not operate the generator for long periods of time without a load being placed on the generator.***

GENERATOR ADJUSTMENTS

Once the generator has been placed in operation, there may be governor adjustments required for engine speed (hertz) during the engine's break-in period (first 50 hours) or after this period.See *ENGINE SPEED (HERTZ) ADJUSTMENT* under *ENGINE ADJUSTMENTS).*

NOTE: *After the first 50 hours of generator operation, check the maintenance schedule for the 50 hour service check.*

SAFETY SHUTDOWN SENSORS AND SWITCHES

SAFETY SHUTDOWN SWITCH/SENSORS

The engine is protected by four automatic shutdown circuits. Should a shutdown occur, ***do not attempt to restart without finding and correcting the cause.*** Refer to the heading *Engine starts, runs and then shuts down* in the *ENGINE TROUBLESHOOTING* section of this manual.

The following is a description of these automatic shutdown circuits:

Water Temperature Sensor

A water temperature sensor is located at the thermostat housing. This sensor sends a DC voltage to the ECU that it interprets as engine antifreeze coolant temperature. Should this voltage reach a set value, the ECU will interpret this as high antifreeze coolant temperature and open the K2 run relay, stopping the generator. The engine temp. LED on the panel will then illuminate.

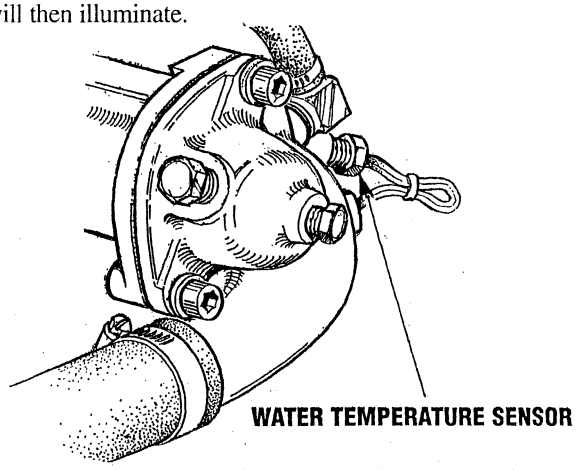

High Exhaust Temperature Switch

An exhaust temperature switch is located on the water injected exhaust elbow. Normally closed, this switch will open and the ECU will interpret this as a high exhaust temperature and open the K2 run relay, stopping the generator. The exhaust temperature LED on the panel will illuminate. The switch opens at 260-270F (127-132C). This switch resets (contacts close) at approximately 225F (107C).

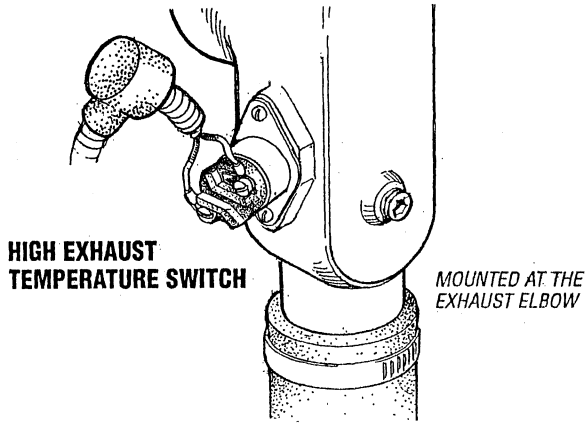

Oil Pressure Sensor

An oil pressure sensor is located off the engines oil gallery. Oil pressure on the sensor affects the DC voltage through the sensor to the ECU. Should the voltage reach a preset value, the ECU will interpret this as a low oil pressure issue and open the K2 run relay, stopping the generator. The oil pressure LED on the panel will illuminate.

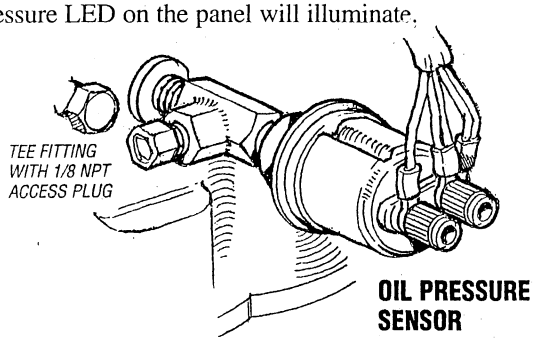

Engine DC Circuit Breaker

The generator's engine DC circuit is protected by a rocker type DC 20 amp breaker mounted on the control box. *This also serves as an Emergency Stop Switch.* Excessive DC current draw or DC electrical overload anywhere in the instrument panel wiring or engine wiring will cause the breaker to trip to the OFF position. In this event, the DC power to the ECU will be interrupted, stopping the generator. No panel LED will illuminate. Check and repair the source of the problem. After repairing the fault, reset the breaker and restart the generator.

NOTE: *Refer to the GENERATOR IMFORMATION page for a description of the of the* ***AC CIRCUIT BREAKER.***

High/Low RPM Shutdown

The ECU monitors engine speed by the AC voltage produced by the MPU. Should this voltage reach a preset value, the ECU will interpret this as an overspeed (2175 rpm approximately) and open the K2 relay, stopping the generator. The panel overspeed LED will illuminate. Should the MPU produce a low AC voltage that the ECU interprets as an underspeed condition, the ECU will open the K2 relay and stop the generator. The overspeed LED will then blink.

MAINTENANCE SCHEDULE

⚠ WARNING: ***Never attempt to perform any service while the engine is running. Wear the proper safety equipment such as goggles and gloves, and use the correct tools for each job. When servicing/replacing DC components, turn off the DC circuit breaker on the control panel, or turn off the battery switch.***

SCHEDULED MAINTENANCE	EXPLANATION OF SCHEDULED MAINTENANCE
DAILY CHECK BEFORE START-UP	
Coolant Level	Check at recovery tank, if empty, check at manifold. Add coolant if needed.
Engine Oil Level	Oil level should indicate between MAX and LOW on dipstick. Do not overfill!
Fuel/Water Separator (owner installed)	Check for water and dirt in fuel. Drain filter if necessary. Replace filter every 250 operating hours or once a year.
Fuel Supply	Fresh unleaded gasoline with an octane rating of 89 or higher. Lower octane will affect engine performance. 10% ethanol maximum.
*Visual Inspection of Engine	Check for fuel, oil and water and exhaust leaks. Check that the water injected exhaust elbow securing v-clamp is tight. Insure there are no exhaust leaks around the elbow. Inspect wiring and electrical connections. Look for loose bolts/hardware and possible corrosion.
Drive Belts	Inspect raw water pump-alternator belt and water pump belt drive. Adjust tension as needed, then check monthly.
INITIAL 50 HOURS OF OPERATION	
*Spark Plugs	Clean/re-gap.
Engine Oil and Filter	Initial engine oil and filter change at 50 hours, then change both every 100 hours.
*Exhaust System	Initial check at 50 hours, then every 250 hours or once a year. Carefully inspect for leaks. Check that the exhaust hoses are properly attached and that the securing clamps are tight. Check the integrity/mounting security of the water injected exhaust elbow.
*Air Screen/Flame Arrestor	Remove, clean and re-install screen pack. Inspect rubber sealing ring and replace if necessary, then once a year.
*Valve Adjustment	Check adjustment of valves. Check again at 500 hours.
*Inlet Fuel Filter	Initial change, then every 250 hours or once a year.
*Fuel Filter	Initial change, then every 250 hours or once a year.
*Cylinder Head Bolts	Re-torque (cold), no further re-torque required.
EVERY 50 OPERATING HOURS OR MONTHLY	
*Drive Belts (Fresh Water/Raw Water Pumps)	Inspect for proper tension (3/8" to 1/2" deflection) and adjust if needed. Check belt for slipping, cracking and wear. Adjust tension or replace as needed. Replace cover.
Starting Batteries	Check electrolyte levels Make sure cables and connections are in good order. Clean off corrosion if needed. Apply petroleum jelly to terminals for corrosion protection.
Electric Fuel Pump	Inspect for leaks, ensure fuel and electrical connections are clean and tight.
Zinc Anode	Inspect and clean zinc anode. Replace if necessary. Note the condition, then determine your own inspection schedule.
EVERY 100 OPERATING HOURS OR YEARLY	
Engine Oil and Filter	Change engine oil and filter.
*Air Screen/Flame Arrestor	Remove, clean and re-install screen pack. Inspect rubber sealing ring and replace if necessary.

*WESTERBEKE recommends this service be performed by a knowledgeable mechanic.

MAINTENANCE SCHEDULE

NOTE: *Use the engine hourmeter to log your engine hours or record your engine hours running time.*

SCHEDULED MAINTENANCE	EXPLANATION OF SCHEDULED MAINTENANCE
EVERY 250 OPERATING HOURS OR YEARLY	
***Exhaust Elbow/Exhaust System**	Check the structual integrity of the water injected exhaust elbow casting. Check the integrity of the exhaust system attached to the elbow. All hose connections should be secure. No chafing. No exhaust leaks. Hoses and muffler are in good serviceable condition. **NOTE:** *An exhaust leak will cause exposure to carbon monoxide!*
***Fuel Filter and O-Rings**	Remove and replace fuel filter and all sealing O-rings.
***Inlet Fuel Filter**	Remove and replace inlet fuel filter.
***Generator**	Check that AC connections are clean and secure. Ensure wires have no chafing. See *GENERATOR INFORMATION.*
***Hoses**	Engine hoses should be firm and tight. Replace if hoses become spongy, brittle or delaminated. Check and tighten all hose clamps as needed.
***Ignition Timing**	Check timing and adjust as needed.
Vibration Isolators/Engine Mounts	Check vibration isolators, brackets and mounting hardware. Replace as needed.
***Heat Exchanger**	Open heat exchanger end cap(s) and clean out debris. Replace gasket and O-rings if needed.
EVERY 500 OPERATING HOURS OR YEARLY	
***Raw Water Pump**	Remove the pump cover and inspect the pump assembly for wear, especially cam and wear plates. Replace the impeller and gasket. Lubricate the impeller when re-assembling.
***Exhaust System Catalyst**	Inspect for proper operation. Replace at 2000 operating hours.
EVERY 500 OPERATING HOURS OR EVERY TWO YEARS	
***Ignition Wires/ Ignition System**	Inspect for deterioration. Test resistance.
***Coolant System**	Drain, flush and re-fill the cooling system with appropriate antifreeze mix. Replace the thermostat and coolant pressure cap.
***Valve Clearances**	Adjust valves. (Incorrect valve clearance will result in poor engine performance.)
***Starter Motor**	Check solenoid and motor for corrosion. Remove and lubricate. Clean and lubricate the starter motor pinion drive
***CO in Exhaust**	Test sample with CO analyzer.
EVERY 1000 OPERATING HOURS OR OR EVERY FIVE YEARS	
***Engine Timing Belt**	Remove and replace the timing belt. **NOTE:** *Failure to replace the timing belt at the recommended interval could result in timing belt failure resulting in major damage to the engine.*
***Heat Exchanger**	Remove the heat exchanger for professional cleaning and pressure testing.
***Diverter Valve**	Replace #054500).
***Oxygen Sensor**	Inspect.
EVERY 2000 OPERATING HOURS	
***Oxygen Sensor**	Test - see Service Manual, replace if needed.
*** Exhaust System Catalyst**	Remove and replace exhaust catalyst.

⚠ WARNING: ***Never attempt to perform any service while the engine is running. Wear the proper safety equipment such as goggles and gloves, and use the correct tools for each job. When servicing/replacing DC components, turn off the DC circuit breaker on the control panel.***

*WESTERBEKE recommends this service be performed by a knowledgeable mechanic.

COOLING SYSTEM

DESCRIPTION

Westerbeke marine engines are designed and equipped for fresh water cooling. Heat produced in the engine by combustion and friction is transferred to fresh water coolant which circulates throughout the engine. This circulating fresh water coolant cools the engine block, its internal moving parts and the engine oil. The heat is transferred externally from the fresh water coolant to raw water by means of a heat exchanger, similar in function to an automotive radiator. Raw water flows through the tubes of the heat exchanger while fresh water coolant flows around the tubes; engine heat transferred to the fresh water coolant is conducted through the tube walls to the raw water which is then pumped into the exhaust system where finally it is discharged overboard. In other words, the engine is cooled by fresh water coolant, this coolant is cooled by raw water, and the raw water carries the transferred heat overboard through the exhaust system. The fresh water coolant and raw water circuits are independent of each other. Using only fresh water coolant within the engine allows the cooling water passages to stay clean and free from harmful deposits.

FRESH WATER CIRCUIT

NOTE: *Refer to* ENGINE COOLANT *section for the recommended antifreeze and water mixture to be used as the fresh water coolant.*

Fresh water coolant is pumped through the engine by a circulating pump, absorbing heat from the engine. The coolant then passes through the thermostat into the manifold, to the heat exchanger where it is cooled and returned to the engine block via the suction side of the circulating pump. When the engine is started cold, external coolant flow is prevented by the closed thermostat (although some coolant flow is bypassed around the thermostat to prevent the exhaust manifold from overheating). As the engine warms up, the thermostat gradually opens, allowing full flow of the engine's coolant to flow unrestricted to the external portion of the cooling system.

Coolant Recovery Tank

The coolant recovery tank allows for engine coolant expansion and contraction during engine operation, without the introduction of air into the cooling system. This tank should be located at or above the engine manifold level and should be easily accessible.

NOTE: *Periodically check the condition of the manifold pressure cap, its rubber seals and the vacuum return valve. Ensure the passage from the filler neck to the recovery tank connection is kept clear.*

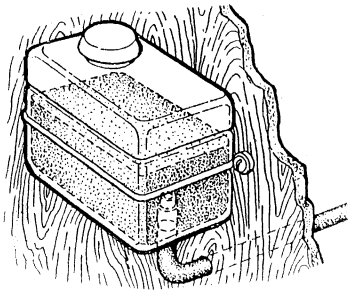

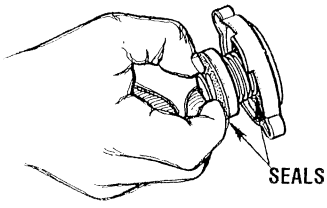

CHANGING COOLANT

The engine's coolant must be changed according to the *MAINTENANCE SCHEDULE*. If the coolant is allowed to become contaminated, it can lead to overheating problems.

> ⚠ **CAUTION:** ***Proper cooling system maintenance is critical; a substantial number of engine failures can be traced back to cooling system corrosion.***

Drain the engine block by removing the drain plug located just above the lube oil filter and opening the manifold pressure cap. Flush the system with fresh water, then start the re-fill process.

NOTE: *The drain plug on the heat exchanger can also be used to drain engine coolant.*

> ⚠ **WARNING:** ***Beware of the hot engine coolant. Wear protective gloves.***

Refilling the Coolant

After replacing the engine block drain plug, close the heat exchanger's coolant petcock. Then run the engine and slowly pour clean, premixed coolant into the manifold.

NOTE: *Open the air-bleed petcock on the heat exchanger. When a steady flow of coolant appears at the petcock, close the petcock and fill the system until the manifold remains full.*

Monitor the coolant in the manifold and add as needed. Fill the manifold to the filler neck and install the manifold pressure cap.

Remove the cap on the coolant recovery tank and fill with coolant mix to halfway between LOW and MAX and replace the cap. Run the engine and observe the coolant expansion flow into the recovery tank.

After checking for leaks, stop the engine and allow it to cool. Coolant should draw back into the cooling system as the engine cools down. Add coolant to the recovery tank if needed. Clean up any spilled coolant.

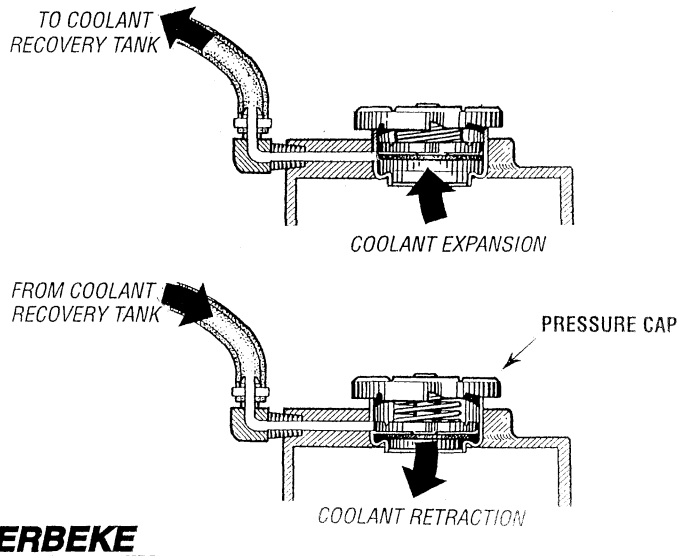

COOLING SYSTEM

THERMOSTAT

A thermostat controls the coolant temperature as the coolant continuously flows through the closed cooling circuit. When the engine is first started the closed thermostat prevents coolant from flowing (some coolant is by-passed through the thermostat to prevent the exhaust manifold from overheating). As the engine warms up, the thermostat gradually opens. The thermostat is accessible and can be checked, cleaned, or replaced easily. Carry a spare thermostat and gasket.

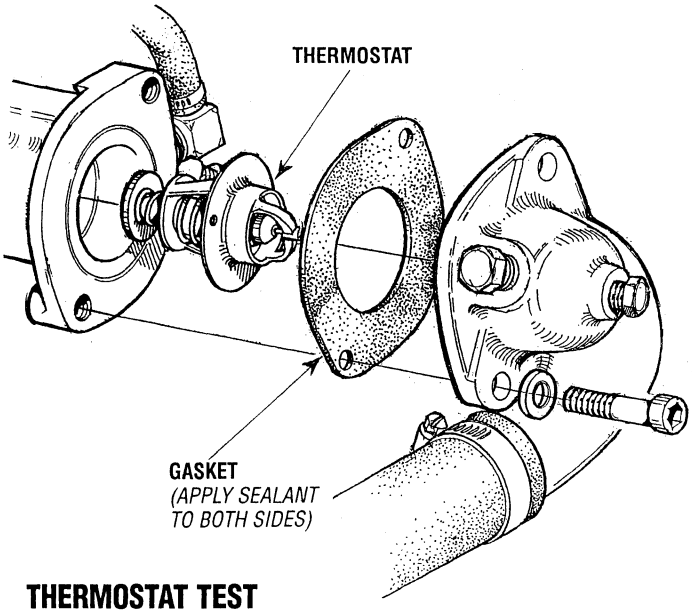

THERMOSTAT TEST

If you suspect a faulty thermostat, place it in a pan of water and bring to a boil. A working thermostat should open about 1/2"

ZINC ANODE

A zinc anode (or pencil) is located in the raw water cooling circuit within the heat exchanger. The purpose of the zinc anode is to sacrifice itself to electrolysis action taking place in the raw water cooling circuit, thereby reducing the effects of electrolysis on other components of the system. The condition of the zinc anode should be checked monthly and the anode cleaned or replaced as required. Spare anodes should be carried on board.

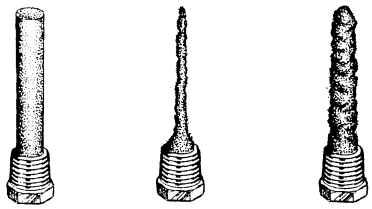

NEW *REPLACE* *CLEAN & REUSE*

NOTE: *Electrolysis is the result of each particular installation and vessel location, not that of the generator.*

If the zinc anode needs replacement, hold the hex boss into which the zinc anode is threaded with a wrench while loosening the anode with another wrench. This prevents the hex boss from possibly tearing off the exchanger shell. After removing the zinc, note the condition of it. If the zinc is in poor condition, there are probably a lot of zinc flakes within the exchanger. Remove the end of the heat exchanger and clean the inside of all zinc debris. Always have a spare heat exchanger end gasket in case the present one becomes damaged when removing the end cover. Replace the sealing gasket (refer to your engine model's heat exchanger end gasket part number), O-ring, cover, and install a new zinc anode.

NOTE: *The threads of the zinc anodes are pipe threads and do not require sealant. sealant should not be used as it may insulate the zinc from the metal of the heat exchanger housing preventing electrolysis action on the zinc.*

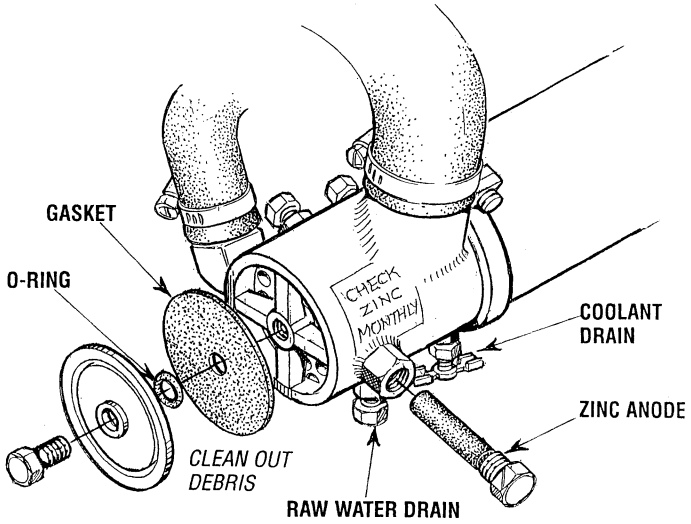

HEAT EXCHANGER

Cool raw water flows through the inner tubes of the heat exchanger. As the engine coolant passes around these tubes, the heat of the internal engine is conducted to the raw water which is then pumped into the exhaust system and discharged. The engine coolant (now cooled) flows back through the engine and the circuit repeats itself.

The engine coolant and raw water are independent of each other; this keeps the engine's water passages clean from the harmful deposits found in raw water.

Heat Exchanger Service

After approximately 1000 hours of operation, remove, clean and pressure test the engine's heat exchanger. (A local automotive radiator shop should be able to clean and test the heat exchanger.)

NOTE: *Operating in silty and/or tropical waters may require that a heat exchanger cleaning be performed more often than every 1000 hours.*

COOLING SYSTEM

RAW WATER INTAKE STRAINER

NOTE: *Always install the strainer at or below the waterline so the strainer will always be self-priming.*

A clean raw water intake strainer is a vital component of the engine's cooling system. Include a visual inspection of this strainer when making your periodic engine check. The water in the glass should be clear.

Perform the following maintenance after every 100 hours of operation:

1. **Close the raw water seacock.**
2. Remove and clean the strainer filter.
3. Clean the glass.
4. Replace the sealing washer if necessary.
5. Reassemble and install the strainer.
6. **Open the seacock.**
7. Run the engine and check for leaks.

NOTE: *Also follow the above procedure after having run hard aground.*

If the engine temperature gauge ever shows a higher than normal reading, the cause may be that silt, leaves or grass may have been caught up in the strainer, slowing the flow of raw water through the cooling system.

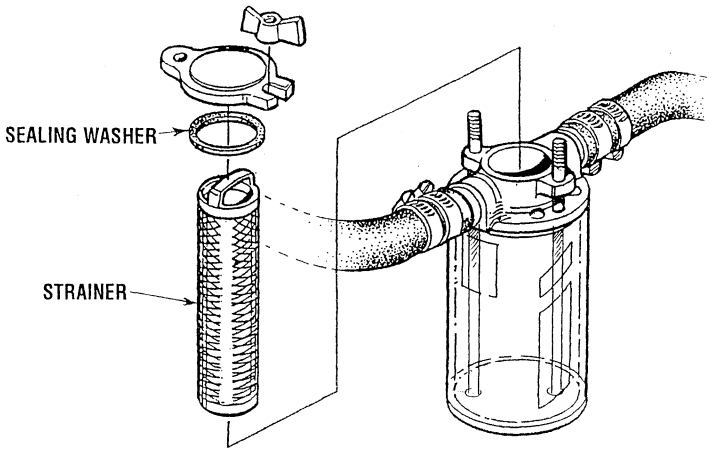

RAW WATER INTAKE STRAINER OWNER INSTALLED (TYPICAL)

RAW WATER PUMP

The raw water pump is a self-priming, rotary pump with a non-ferrous housing and a Neoprene impeller. The impeller has flexible blades which wipe against a curved cam plate within the impeller housing, producing the pumping action. **On no account should this pump be run dry.** There should always be a spare impeller and impeller cover gasket aboard (an impeller kit). Raw water pump impeller failures occur when lubricant (raw water) is not present during engine operation. Such failures are not warrantable, and operators are cautioned to make sure raw water flow is present at start-up. The raw water pump should be inspected periodically for broken or torn impeller blades. See *MAINTENANCE SCHEDULE.*

Changing the Raw Water Pump Impeller

Close the raw water intake valve. Remove the pump cover and, with the aid of two small screwdrivers, carefully pry the impeller out of the pump. Install the new impeller and gasket. Move the blades to conform to the curved cam plate and push the impeller into the pumps housing. When assembling, apply a thin coating of lubricant to the impeller and gasket. Open the raw water intake valve.

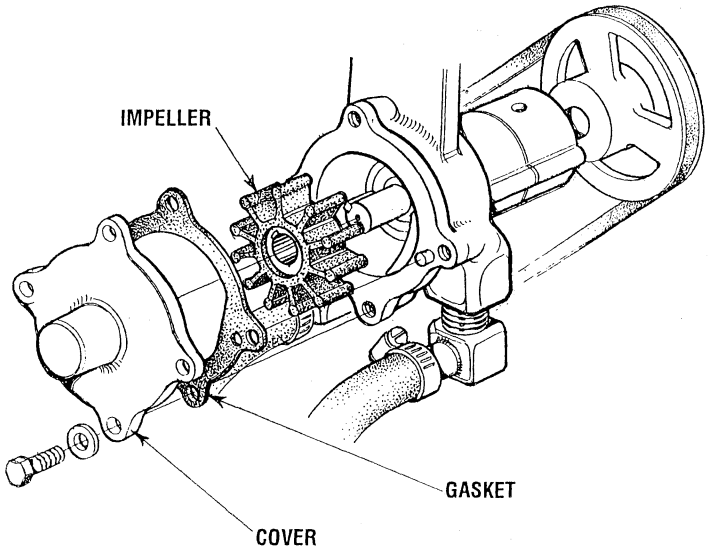

⚠ CAUTION: ***If any of the vanes have broken off the impeller, they must be found to prevent blockage in the cooling circuit. They often can be found in the heat exchanger.***

FUEL SYSTEM

GASOLINE

Use ***unleaded*** 89 Octane or higher. Ethanol blend not to exceed E10 (10%). When fueling, follow U.S. Coast Guard regulations, close off all hatches and companionways to prevent fumes from entering the boat, and ventilate after fueling.

NOTE: *The generator compartment should have a gasoline fume detector/alarm properly installed and working.*

GASOLINE/WATER SEPARATOR AND FILTER

A primary fuel filter of the water separating type **must** be installed between the fuel tank and the engine to remove water and other contaminant's from the fuel before they can be carried to the fuel system on the engine.

Most installers include a type of filter/water separator with the installation package as they are aware of the problems that contaminant's in the fuel can cause.

These gasoline filters must have ***metal*** bowls (not "see-through") to meet U.S. Coast Guard requirements. The metal bowls have drain valves to use when checking for water and impurities. **This filter must be 10 microns or smaller.**

FUEL PUMP

Periodically check the fuel connections to and out of the pump and make sure that no leakage is present and that the fittings are tight and secure. The engine mounted fuel pump is maintenance free.

ENGINE FUEL FILTER

Periodically check the fuel connections and the bowl for leakage. Replace the filter element after the first 50 hours then follow the *MAINTENANCE SCHEDULE.*

Changing Filter Element

1. Shut the fuel supply.
2. Ensure there is no pressure in the fuel system by bleeding off any existing pressure using a Schrader valve on the throttle body and the fuel cell. Use a pressure testing kit as shown on the next page.
3. Unscrew the fuel bowl from the housing and allow the bowl to come away from the housing.
4. Remove and replace the filter element and clean the bowl.
5. Replace all sealing O-rings.
6. Press on a new filter and replace the filter bowl.
7. Open the fuel supply. Inspect for leaks.

INLET FUEL FILTER

1. Shut off the fuel supply to the generator. Disconnect the fuel supply line to the inlet filter and unscrew the filter from the pump inlet. Take care to catch any fuel that may be present.
2. Thread on the replacement inlet filter and connect the fuel supply line. Use care when connecting and tightening the fuel supply line so as not to distort the inlet filter. This can cause an air leak.
3. Turn on the fuel supply to the generator and start the generator. Ensure that there are no leaks

NOTE: *Follow the fuel system maintenance. The fuel system should be properly bled of air following the procedures outlined on the following page to ensure all air is bled from the engine fuel system. Air in the fuel system will affect engine operation.*

⚠ WARNING: ***Shut off the fuel valve at the tank when servicing the fuel system. Take care in catching any fuel that may spill.***

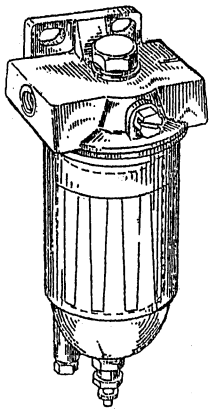

OWNER INSTALLED FUEL WATER SEPERATOR

(WESTERBEKE PART #49602)

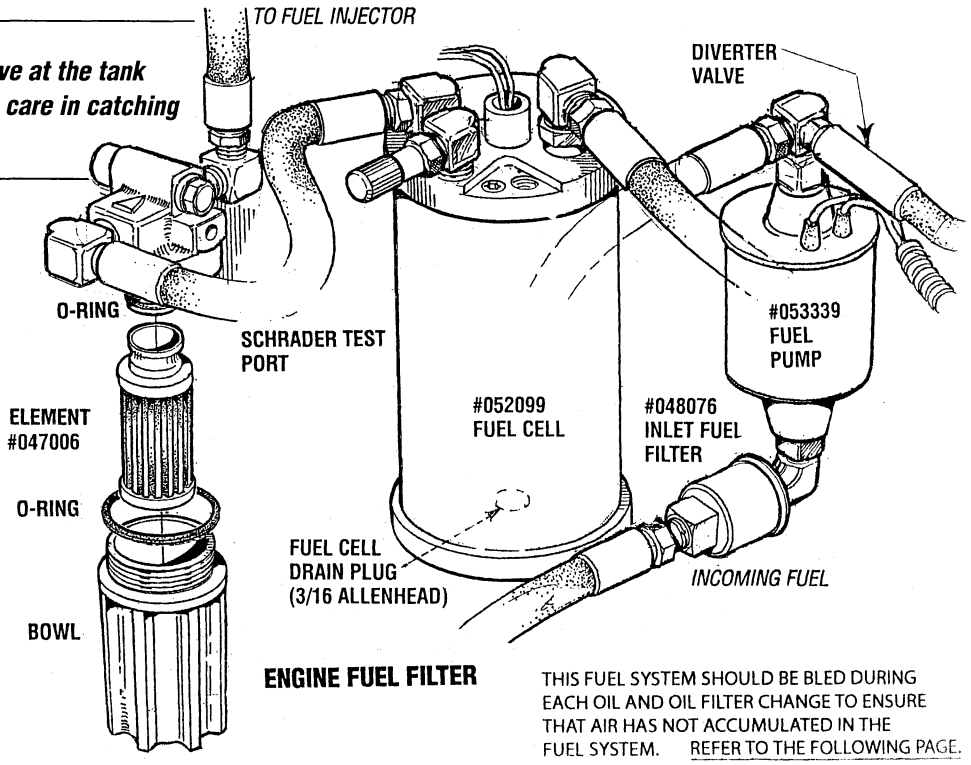

ENGINE FUEL FILTER

THIS FUEL SYSTEM SHOULD BE BLED DURING EACH OIL AND OIL FILTER CHANGE TO ENSURE THAT AIR HAS NOT ACCUMULATED IN THE FUEL SYSTEM. REFER TO THE FOLLOWING PAGE.

BLEEDING THE FUEL SYSTEM

If the engine cranks but fails to start or starts and then shuts down, there may be air in the fuel system. Use the following procedure to purge air from the fuel system.

1. Connect a fuel pressure gauge kit (Snap-On MT 3378) or equivalent to the Schrader port on the fuel cell.

> ⚠ **CAUTION:** ***Follow the manufacturers instructions for the safe use of the pressure gauge kit when purging high pressure fuel systems.***

2. While holding the STOP switch in the prime (depress) position, bleed the air from the fuel cell. The fuel cell is purged when no air bubbles are visible escaping from the bleed line.
3. Remove the pressure gauge kit from the fuel cell and connect it to the Schrader valve at the throttle.
4. Open the valve on the fuel pressure gauge line. Do not prime system without the fuel gauge purge valve open or air can be forced back into fuel cell. If this happens, repeat steps **1**, **2**, and **3** to remove trapped air from the fuel cell.
5. Repeat step **2**, this time purging the air completely from the throttle body. The pressure should be 40psi in the throttle body after purging the system.

   NOTE: *The system can develop 40psi without being fully purged. The system is only fully purged when no bubbles are visible in the purge line.*
6. Remove the pressure gauge set, and cap all Schrader valves.
7. Insure that all wire connections are secure and that there are no leaks in the fuel system.

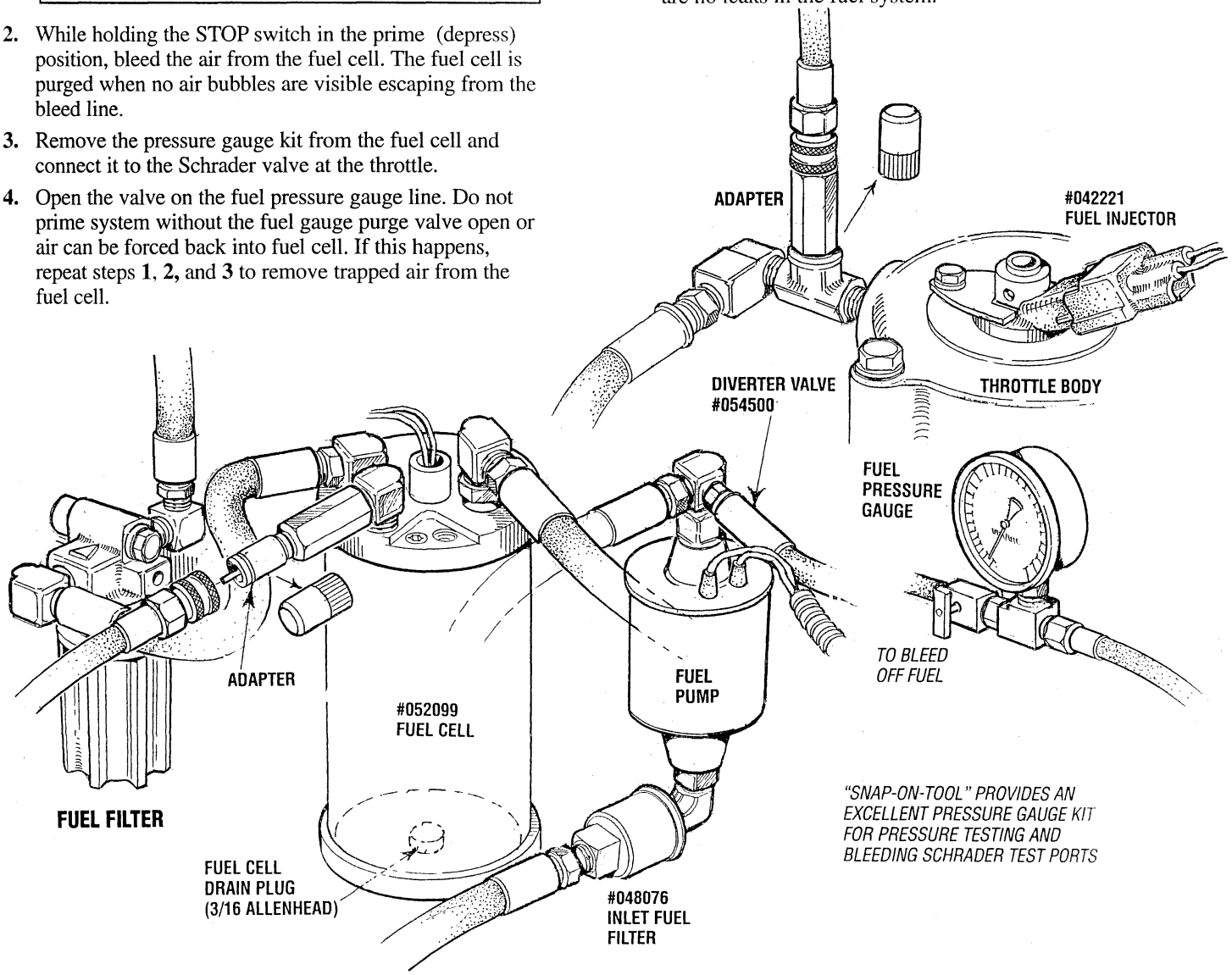

BLEEDING THE FUEL SYSTEM

ELECTRONIC FUEL INJECTION (EFI)

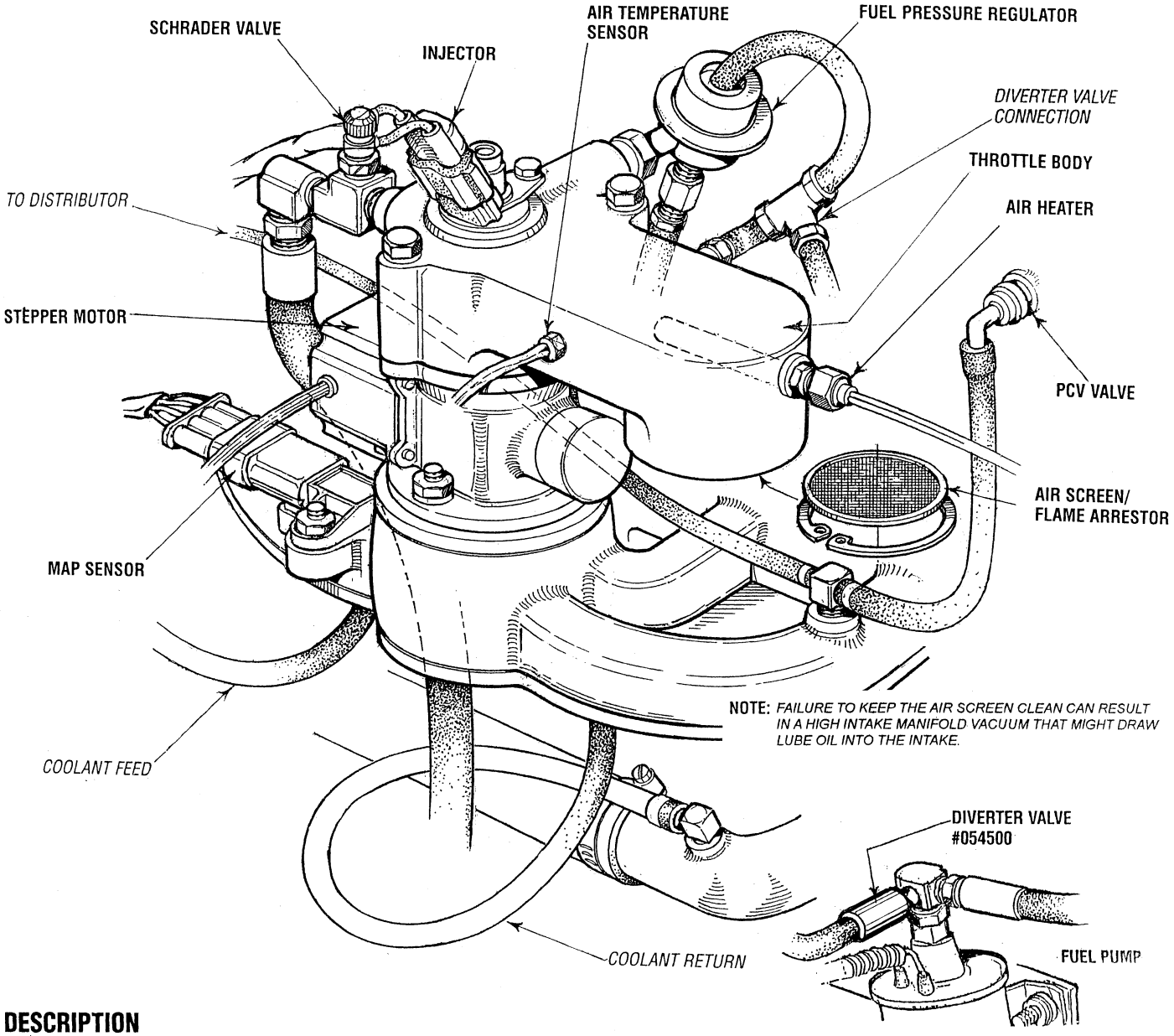

DESCRIPTION

The above illustration shows the throttle body assembly that attaches to the intake manifold.

An electronic control unit (ECU) controls the fuel injector and the stepper motor.

The ECU is supplied with engine operating conditions from sensors that monitor intake air temperature, engine coolant temperature, map sensor (intake manifold absolute pressure), engine rpm and battery voltage.

The ECU interprets this information to determine the appropriate injector pulse rate and throttle opening position.

A high pressure fuel pump supplies fuel to the area around the injector and the regulator maintains the fuel pressure in that area at 35 - 40 PSI maximum.

The injector is a solenoid operated pintle valve that meters fuel into the intake manifold depending on engine operating conditions and generator amperage load determined by the ECU.

Air flow into the intake manifold is controlled by the ECU operation of the throttle plate via the stepper motor. Throttle plate positioning for proper air flow into the engine is accomplished through the ECU interpretation of engine operating conditions. The Schrader valve is used to monitor/check fuel pressure around the fuel injector.

DIVERTER VALVE

The diverter valve mounted on the electric fuel pump shown in the illustration must be replaced every 1000 operating hours, or every 5 years.

ENGINE LUBRICATING OIL

DESCRIPTION

Use a heavy duty engine oil with an API classification of SJ, SL, or SM.

Westerbeke Corporation does not approve or disapprove the use of synthetic oils. If synthetic oils are used, engine break-in must be performed using conventional oils. Oil and filter changes must be as listed in the Maintenance Schedule of the Operators Manual.

Use a SAE 10W-40 or SAE 15W-40 for all operating temperature ranges.

> ⚠ **CAUTION:** ***Do not allow two or more brands of engine oil to mix. Each brand contains its own additives; additives of different brands could react in the mixture to produce properties harmful to your engine.***

CHANGING THE ENGINE OIL

The engine oil should be warm. Remove the oil drain hose from its attachment bracket and lower it into a container and allow the oil to drain, or attach a pump to the end of the drain hose and pump the old oil out. Make sure the oil drain hose is properly secured in its holder after all of the old oil has been drained.

Always observe the old oil as it is removed. A yellow/gray emulsion indicates the presence of water in the oil. Although this condition is rare, it does require prompt attention to prevent serious damage. Call a competent mechanic if water is present in the oil. Raw water present in the oil can be the result of a fault in the exhaust system attached to the engine and/or a siphoning through the raw water cooling circuit into the exhaust, filling into the engine.

> ⚠ **WARNING:** ***Used engine oil contains harmful contaminants. Avoid prolonged skin contact. Clean skin and nails thoroughly using soap and water. Launder or discard clothing or rags containing used oil. Discard used oil properly.***

REPLACING THE OIL FILTER

When removing the used oil filter, you may find it helpful to punch a hole in the upper and lower portion of the old filter to drain the oil into a container before removing it. This helps to lessen spillage. An automotive filter wrench should be helpful in removing the old oil filter. Place some paper towels and a plastic bag around the filter when unscrewing it to catch any oil that's in the filter. Inspect the old oil filter as it is removed to make sure that the rubber sealing gasket comes off with the old oil filter. If this rubber sealing gasket remains sealed against the oil filter adapter, gently remove it. When installing the new oil filter element, wipe the filter gasket's sealing surface on the oil filter adapter free of oil and apply a thin coat of clean engine oil to the rubber sealing gasket on the oil filter. Screw the filter onto the threaded oil filter stub, and tighten the filter firmly by hand.

NOTE: *Use genuine WESTERBEKE oil filters. Generic filters are not recommended.*

REFILLING THE OIL SUMP

Add fresh oil through the valve cover. After refilling the oil, run the engine for a few moments while checking the engine's oil pressure. Make sure there is no leakage around the new oil filter or from the oil drain system, and then stop the engine. Then check the quantity of oil with the lube oil dipstick. Fill to, but not over, the FULL mark on the dipstick.

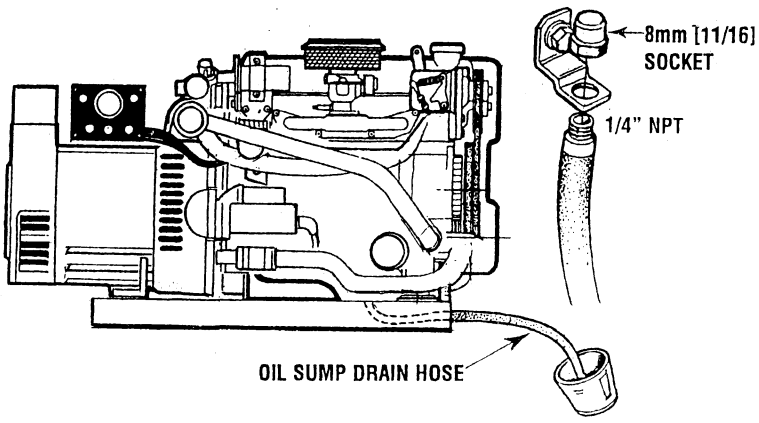

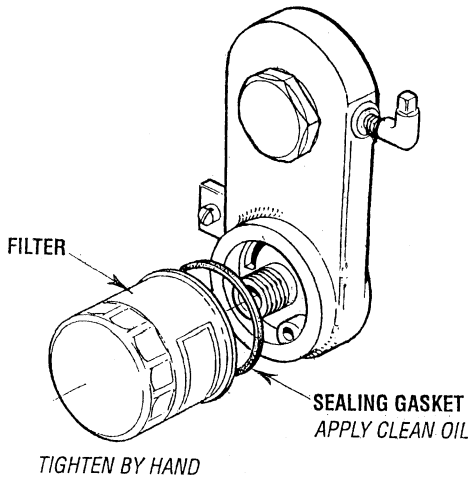

OIL PRESSURE

NOTE: *WESTERBEKE recommends that the following engine adjustments be performed by a competent engine mechanic. The information below is provided to assist the mechanic.*

DESCRIPTION

The lubricating system is a pressure feeding system using an oil pump. The engine oil is drawn from the oil sump by the oil pump, which drives the oil, under pressure, through the oil filter, oil cooler and various lubricating points to the engine. The oil then returns to the oil sump to repeat the continuous cycle. When the oil pressure exceeds the specific pressure, the oil pushes open the relief valve in the oil pump and returns to the oil sump, keeping the oil pressure within its specific range.

LOW OIL PRESSURE

the specified safe minimum oil pressure is 4.3 + 1.4 psi (0.3 -0.1 kg/cm²). A gradual loss of oil pressure usually indicates worn bearings. For additional information on low oil pressure readings, see the engine troubleshooting chart.

TESTING OIL PRESSURE

To test the oil pressure, remove the hex plug from the oil manifold and install a mechanical oil pressure gauge in its place. After warming up the engine, set the engine speed at 1800 rpm and read the oil pressure.

OIL PRESSURE BETWEEN 50 AND 60 PSI AT 1800 RPM

NOTE: *A newly started (cold) engine may have an oil pressure up to 70 or 80 psi. A warmed engine can have an oil pressure as low as 30 psi. Oil pressure will vary depending on the load placed on the generator.*

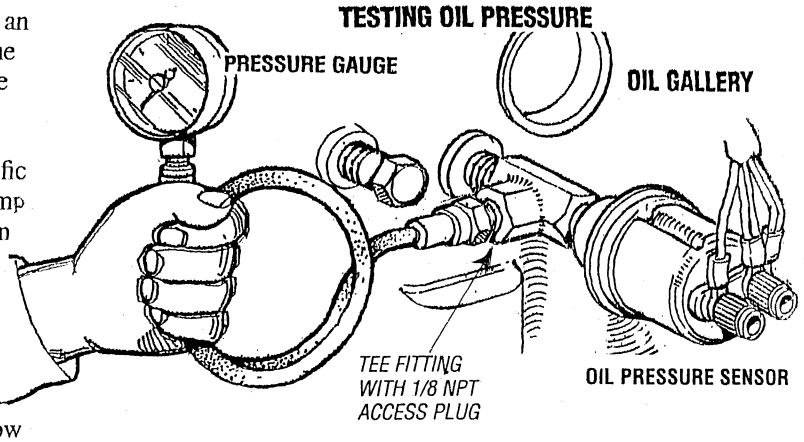

OIL PRESSURE SENDER

An oil pressure sender #049197 is fitted to the engine oil gallery. This sends a voltage signal to the control ECU that it interprets as oil pressure. Should this voltage signal fall to a present value, the ECU will shut the unit down and illuminate the oil pressure LED on the control panel.

Test the sensor by checking resistance (at rest):

SENDOR AND SWITCH TORQUE 9 - 13 ft-lb (1.2 - 1.8 m-kg)

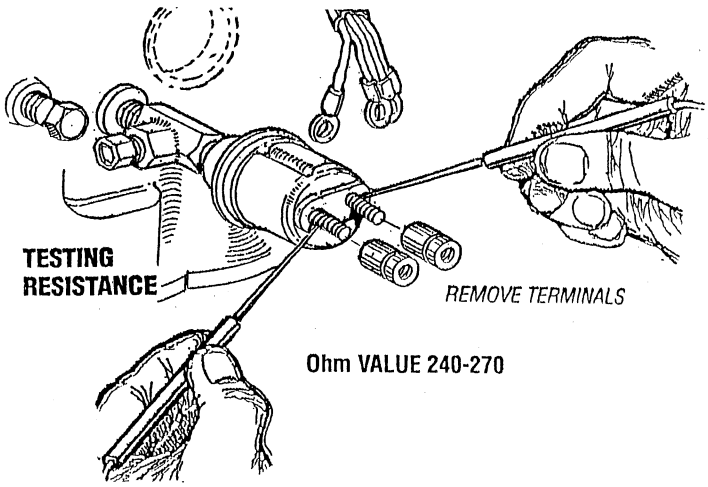

AIR SCREEN / FLAME ARRESTER

The air screen/ flame arrester should be inspected and cleaned. Inspect the rubber sealing and replace if worn or cracked. Clean the screen in a water soluble cleaner such as gunk.

NOTE: *FAILURE TO KEEP THE AIR SCREEN CLEAN CAN RESULT IN A HIGH INTAKE MANIFOLD VACUUM THAT MIGHT DRAW LUBE OIL INTO THE INTAKE.*

⚠ WARNING: ***The generator should never be started or operated without the airscreen/flame arrester in place.***

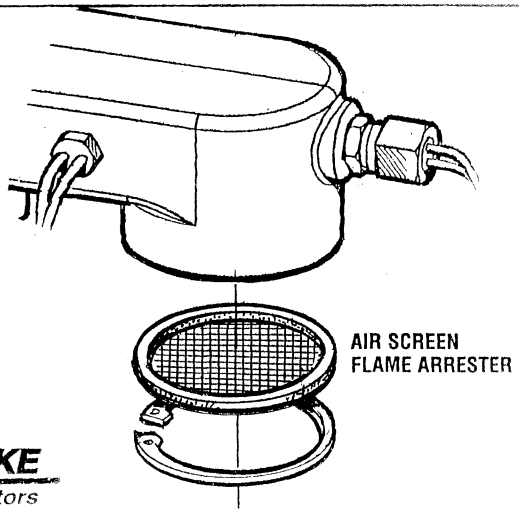

TIMING BELT
DISASSEMBLY/INSPECTION

NOTE: *The timing belt can be inspected/replaced with the generator in the boat.*

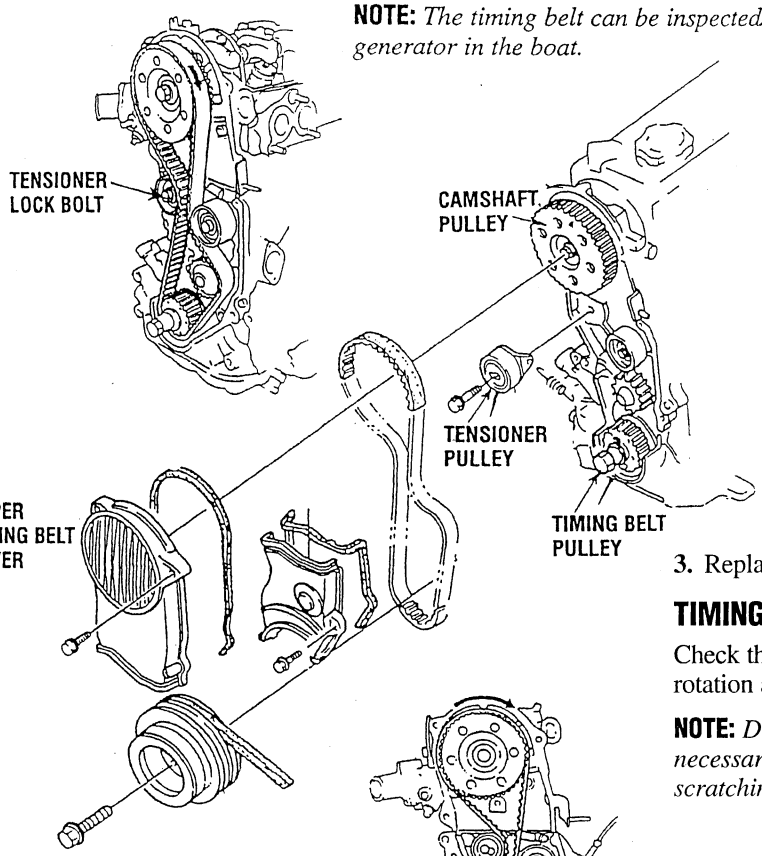

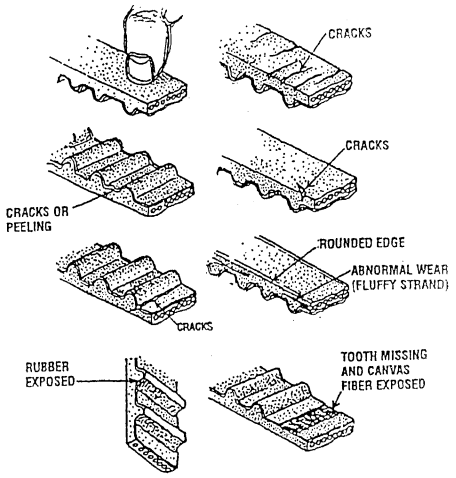

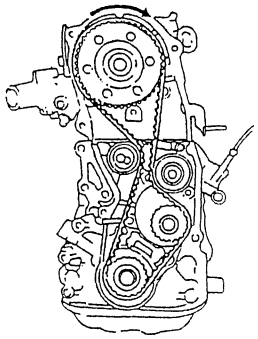

MARK THE FORWARD ROTATION OF THE BELT TO PREVENT INCORRECT INSTALLATION IF THE BELT IS TO BE RE-USED.

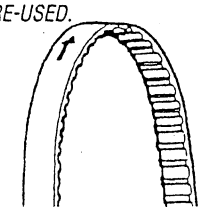

DISASSEMBLY

1. Remove the tensioner spring after loosening the tensioner lock bolt.
2. Remove the timing belt.

NOTE: *Do not allow oil or water to contaminate the timing belt. Do not twist, turn inside out, or bend the belt.*

TIMING BELT INSPECTION

1. Replace the timing belt if there is any oil, grease, or moisture on it.
2. Check for damage, wear, peeling, cracks, and hardening. Replace if necessary.
3. Replace the belt if any of the above conditions exist.

TIMING BELT TENSIONER AND IDLER PULLEY

Check the timing belt tensioner and idler pulley for smooth rotation and abnormal noise. Replace if necessary.

NOTE: *Do not clean the tensioner with cleaning fluids. If necessary, use a soft rag to wipe it clean, and avoid scratching it.*

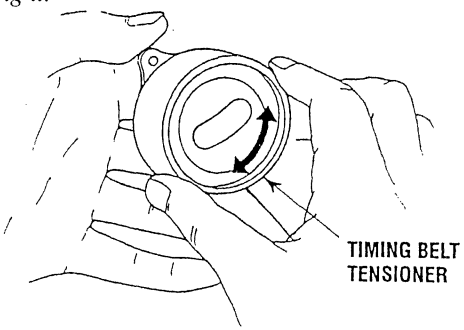

TIMING BELT PULLEY AND CAMSHAFT PULLEY

Inspect the pulley teeth for wear, deformation, or other damage. Replace if necessary.

NOTE: *Do not clean the pulley with cleaning fluids. If necessary, use a rag to wipe it clean.*

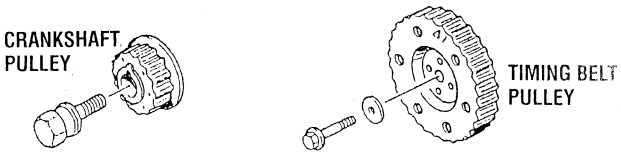

TIMING BELT COVER (LOWER AND UPPER)

Inspect the timing belt covers for damage or cracks. Replace if necessary.

TIMING BELT

INSTALLATION

1. Align the timing mark on the timing belt pulley and camshaft pulley with the marks.
2. Remove all the spark plugs. This is to prevent compression when rotating the timing belt.

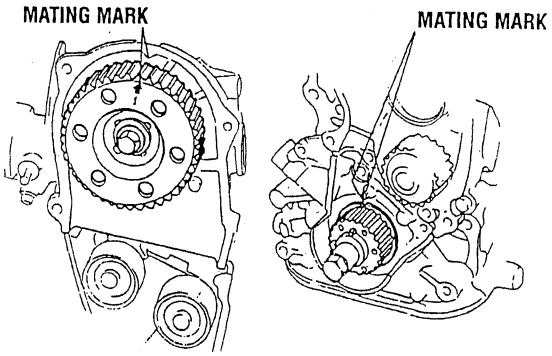

3. Install the timing belt tensioner and spring.
4. Position the timing belt tensioner all the way to the intake side, and temporarily secure it by tightening the lock bolt.

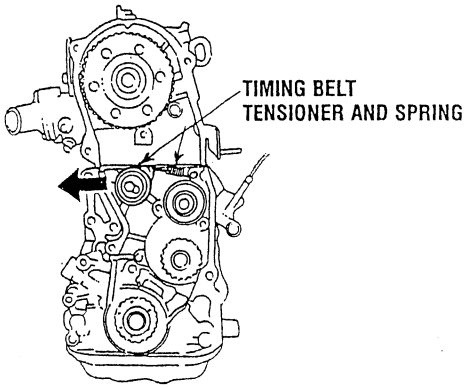

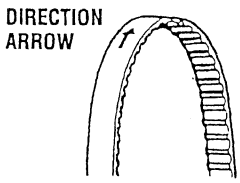

IF RE-USING THE TIMING BELT, INSTALL IT IN THE DIRECTION OF THE APPLIED ARROW - FORWARD ROTATION.

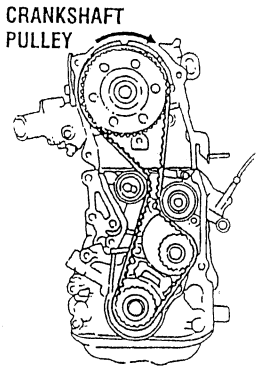

5. Install the timing belt on the crankshaft pulley and the camshaft pulley from the tension side (the right side as viewed from the front of the engine) so that tension is retained.
6. Loosen the tensioner lock bolt so that the tensioner spring applies tension.
7. Turn the crankshaft twice in the direction of rotation. This will apply equal tension to each side of the timing belt.

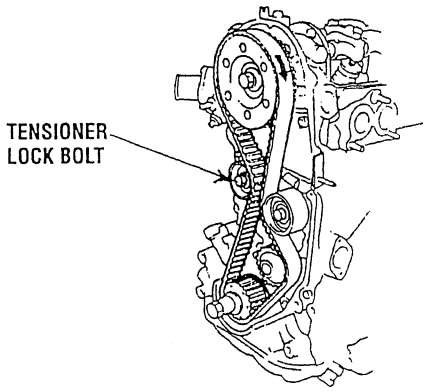

⚠ CAUTION: ***Water or oil on the timing belt severely reduces the service life of the belt. keep the timing belt sproket and tensioner free of oil and grease. These parts should never be cleaned. Replace if seriously contaminated with dirt or oil. If oil is evident on these parts, check the front case, oil pump seals, and camshaft oil seals for a possible leak.***

ENGINE ADJUSTMENTS

SPARK PLUGS

The spark plugs should be cleaned and re-gapped after the first 50 hours of break-in operation. Then replace the spark plugs every 250 hours of engine operation. Spark plugs play an important part in the LOW CO system operation.

> ⚠ **WARNING:** ***Do not remove the spark plugs while the engine is hot. Allow the engine to cool before removing them.***

Spark Plug Gap: 0.28 – 0.31 in. (0.7 – 0.8 mm)

Spark Plug Torque: 10 – 15 lb-ft (1.5 – 2.31 kg-m)

NOTE: *Loctite Anti-Seize applied to the threaded portion of the spark plugs will retard corrosion, making future removal of the spark plugs easier.*

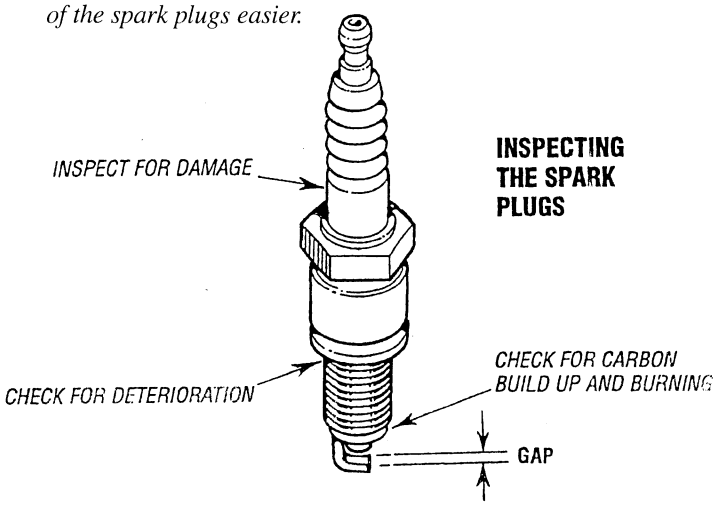

INSPECTING THE SPARK PLUGS

HIGH TENSION CORDS (IGNITION WIRES)

Check all the high tension ignition wires every 500 operating hours and reolace after 1,000 hours of engine operation. High engine compartment temperatures will lead to the deteriorate the wires.

Check the resistance of each wire. Do not pull on the wire because the wire connection inside the cap may become seperated or the insulator may be damaged. When removing the wires from the spark plugs, grasp and twist the moulded cap, then pull the cap off the spark plug.

The resistance value is 410 ohm per inch of wire.

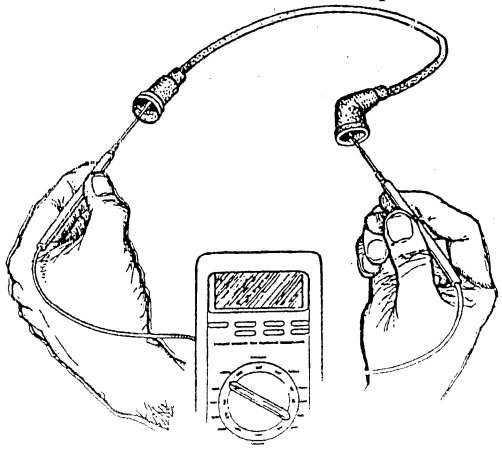

CHECKING RESISTANCE

DRIVE BELT ADJUSTMENT

The drive belt must be properly tensioned. Excessive drive belt tension can cause rapid wear of the belt and reduce the service life of the fresh water pump's bearing. A slack belt or the presence of oil on the belt can cause belt slipping, resulting in high operating temperatures.

The 22.5Kw and 20KW generators have two drive belts, one drives the DC alternator and the other drives the raw water pump. The tension adjustment procedure for both belts is as follows:

> ⚠ **WARNING:** ***Never attempt to check or adjust the drive belt's tension while the engine is in operation.***

1. Remove the belt guard.
2. To adjust the DC alternator drive belt, loosen the pivot bolt and adjusting arm bolts.

   To adjust the raw water pump/fresh water pump drive belt, loosen the two raw water pump mounting bolts.
3. With the belt(s) loose, inspect for wear, cracks and frayed edges, and replace if necessary.
4. To loosen or tighten the DC alternator drive belt, slide the alternator in or out as required, then retighten its two mounting bolts.

   To loosen or tighten the raw water pump/fresh water pump drive belt, slide the raw water pump in or out as required, then retighten its mounting bolts.
5. The drive belts are properly adjusted if it can be deflected no less than 3/8 inch (10mm) and no more than 1/2 inch (12mm) as the belt is depressed with the thumb at the midpoint between the two pulleys on the longest span of the belt.

   NOTE: *Maintain a 22 lb pressure to the belt's outer face for proper belt operation. Spare belts should always be carried on board.*
6. Operate the generator for about 5 minutes, then shut down the generator and recheck the belt(s) tension.
7. Replace the belt guard.

ENGINE ADJUSTMENTS

NOTE: *WESTERBEKE recommends that the following engine adjustments be performed by a competent engine mechanic.*

VALVE CLEARANCE ADJUSTMENT

NOTE: *Retorque the cylinder head bolts before adjusting the engine's valves. See* TORQUING THE CYLINDER HEAD BOLTS.

1. Remove the rocker cover and gasket.
2. Position the No.1 piston at Top dead Center (TDC) of its compression stroke. Adjust the Intake and Exhaust valves for cylinder #1 and the Intake valve for cylinder #2 and the Exhaust valve for cylinder #3. Rotate the crankshaft 360° and adjust the remaining valves.

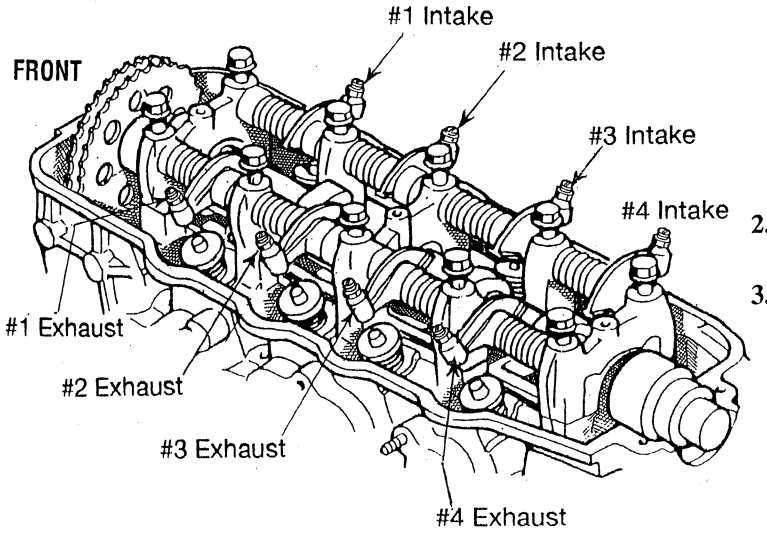

3. Replace the rocker cover and the rocker cover gasket.

   ROCKER COVER TORQUE: 2.9 - 5.1 lb-ft (0.4 - 0.7 kg-m)
4. Adjust all valves to 0.012 (0.30mm) with the engine hot.

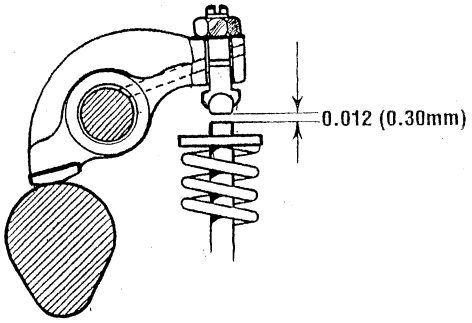

IGNITION TIMING

1. Attach a digital timing light to the #1 spark plug and mark the front crankshaft timing groove and the timing mark on the scale embossed on the engine's front cover.

   Each timing mark represents 2°.

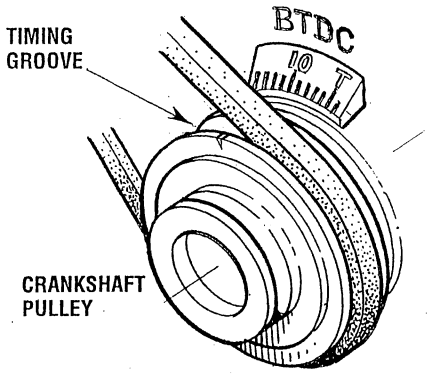

2. Start the engine and warm the engine to its normal operating temperature.
3. Using the digital timing light, check the ignition timing first with the vacuum hose disconnected from the distributor and then with it connected. Compare timing with the specifications below. Adjust the timing as needed.

   Timing Specifications: 16° BTDC at 1800 rpm ±1°
   (vacuum advance hose disconnected)
   33° BTDC at 1800 rpm ±1°
   (vacuum advance hose connected)

TORQUING THE CYLINDER HEAD BOLTS

After the initial break-in period (approximately 50 hours), the cylinder head bolts should be re-torqued.

Tighten the cylinder head bolts according to the sequence shown. Make sure the engine is cold when this is done, and loosen one head bolt one-half turn and then tighten it between 51-55 lb-ft (8.2-8. 8m-kg) Then proceed to the next head bolt in the sequence. Tighten the RS (rocker cover stud) securely.

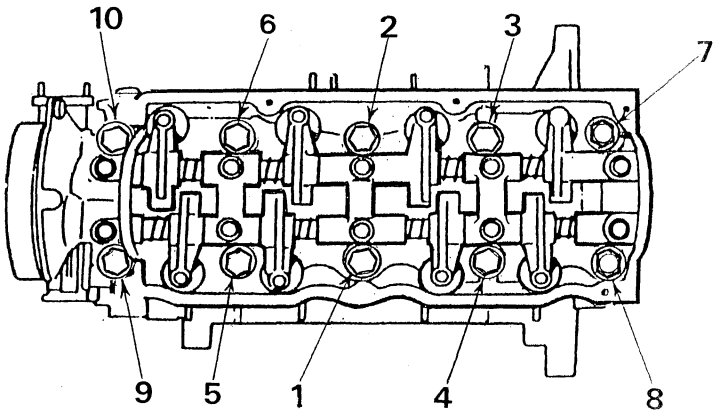

ELECTRONIC CONTROL UNIT (ECU)
CURRENT MODELS

DESCRIPTION

The ECU (Electronic Control Unit) is factory programmed and requires no adjustment. No adjustments in the field can be made to the programming other than engine speed for 50 or 60 hertz operation. The ECU controls starting, engine operation, safety shutdown features and stopping the engine.

The 10 pin communications port is used by the factory to input the operating program into the ECU. This connection can be used with available software Diagnostic Software Kit (#055410) to monitor the operation of the Low CO system and also with the same software to change engine speed for 50 or 60 hertz operation.

The ECU is normally programmed for 60 hertz operation unless specified otherwise. If it is necessary to change the hertz setting of the ECU, the available software has to be used to change this program setting in the ECU. It can not be done any other way.

Setting/Changing Engine Speed

The engine speed can be set for generator operation at either 60Hz (1800 rpm) or 50Hz (1500 rpm). Once the AC voltage output for the generator has been reconfigured as described in the BE Generator section of this manual, proceed as follows:

1. Open the control box on the generator. Shut OFF the DC breaker on the control.
2. Access the opening on the ECU by removing the plug. Connect your laptop (with the software installed) using the communications cable included in the kit to the ECU and turn the laptop ON.

   NOTE: *The arrow on the communications cable connecting plug for the ECU* ***must*** *face the harness connections for the ECU.*
3. Turn the DC breaker to the ON position.
4. Using the EC11 software, start communications. Follow the HELP menu instructions for HELP US using the PC Interface. Program the ECU for the hertz that the generator is being converted to.

   NOTE: *The PC Interface can be left conected to confirm proper rpm during testing. Always stop the generator and turn OFF the DC breaker before disconnecting the communications cable from the ECU.*
5. Along with a hertz change/engine speed, the AC output configuration of the generator will need to be changed to correspond to the new hertz the generator will now be programmed for. AC configurations are illustrated in this manual for both single and three phase models.
6. Along with the reconfiguring of the generators AC output, the generator's AC circuit breaker will need to be changed to correspond to the new amperage rating of the generator. Single phase AC breakers are listed in this manual.

   NOTE: *AC circuit breakers are not supplied with the 3 phase model.*

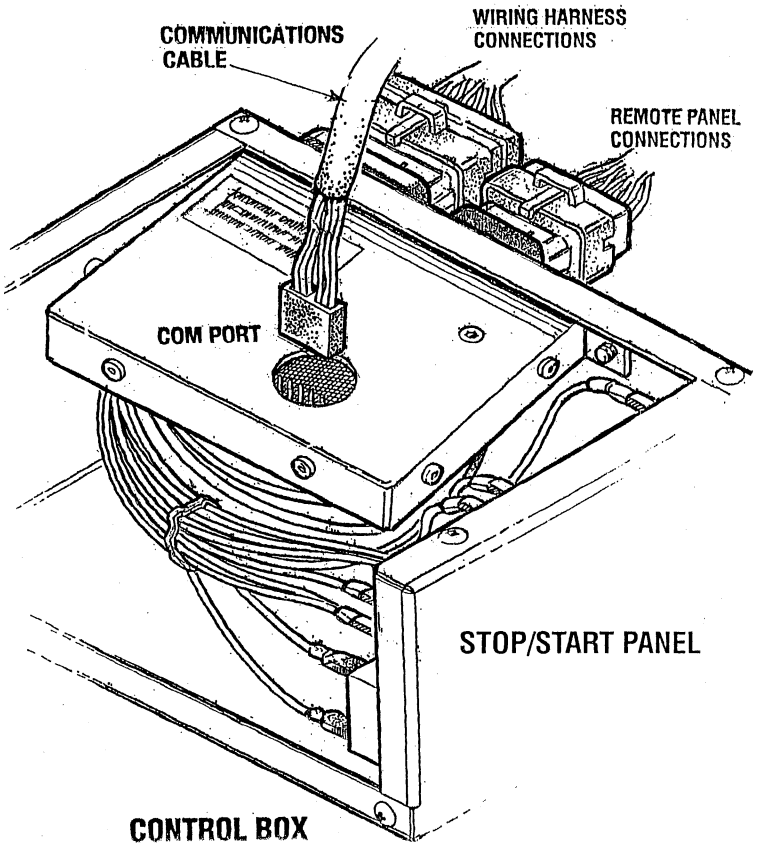

ELECTRONIC FUEL INJECTION
EARLIER MODELS

DESCRIPTION

The ECU (Electronic Control Unit) is factory programmed and requires no adjustments by the generator operator. It controls all starting, operating and safety shutdown features on the engine. The Gain Pot is set at #50 midpoint for optimum system response.

Dipswitch #1 is used to charge the generator frequency. ON is for 50 hertz and OFF is for 60 hertz operation. The remaining switches #2, #3 and #4 service no function.

The vacant program connector is used by the factory to input the operating program into the ECU. This connector can be used with software to monitor the operation of the Low CO system. Contact your MD to obtain the software kit.

The electrical connections from the engine electrical harness are made to the ECU through two plug connections, one 23 pin and one 35 pin and may therefore vary in number according to the generator model. For further details, consult the engine circuit wiring diagram in this manual.

The ECU is normally set for operation at 60 Hz unless specified otherwise, and is internally configured for a 4 pole generator. If it is necessary to replace the ECU, make sure it is configured by label for the generator in use.

ECU ADJUSTMENTS

Stability Trim (Gain)

When changing engine speed, or if an engine hunting condition should occur, the gain pot may require adjustment. There is no specific set point for this adjustment and it is normally set to the middle of its range or to a point in its range which obtains optimal engine speed response without any tendency of hunting.

NOTE: *The Electrical Control Unit (ECU) for current generators is shown on the following page. Adjustments on this page are for earlier model generators.*

Setting/Changing Engine Speed

The engine speed can be set for operation at either 60Hz (1800 rpm) or 50Hz (1500 rpm) to correspond to the engine speeds for a 4 pole AC generator.

1. Turn OFF the Control Box DC breaker and move the #1 dipswitch on the ECU of the OFF position for 60 hertz and ON for 50 hertz operation.
2. When changing the engine speed/generator hertz, a corresponding change is made to the AC voltage output configuration of the generator. The AC voltage output configurations are illustrated in this manual for both single and three phase models.
3. The AC breaker in the control box will also need to be changed to correspond to the amperage rating change of the generator that this Hertz/AC voltage output configuration change will produce. The AC breakers are listed in this manual.
4. Once all of the above has been accomplished, the generators AC breaker should be turned OFF and the unit test run. Hertz and AC output should be monitored. The AC voltage (if needed) can be adjusted using the voltage pot on the regulator.
5. There is a GAIN adjustment on the ECU that usually gives the best system reaction to amperage load changes when set between #40-#60.

   NOTE: *A higher GAIN adjustment can induce unstable engine operation. In such cases, lessen the GAIN adjustment.*

With the test run performed and adjustments are made as needed, turn ON the AC breaker and load test the generator.

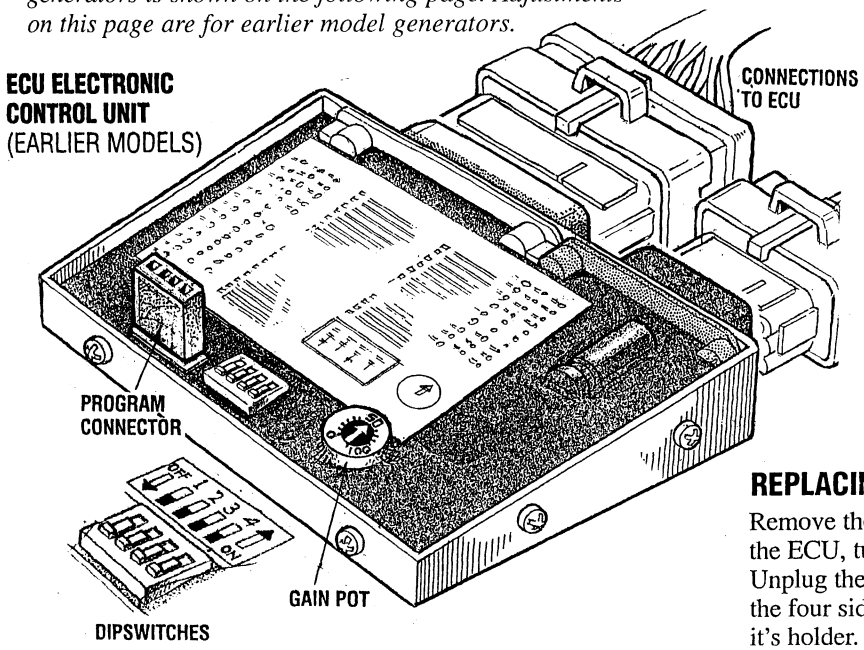

REPLACING THE ECU

Remove the control box cover. Before attempting to remove the ECU, turn OFF the 20 amp DC control panel breaker. Unplug the two engine harness connections. Then unscrew the four side screws securing the ECU and remove it from it's holder. To install a new ECU, reverse the procedure.

STARTER MOTOR

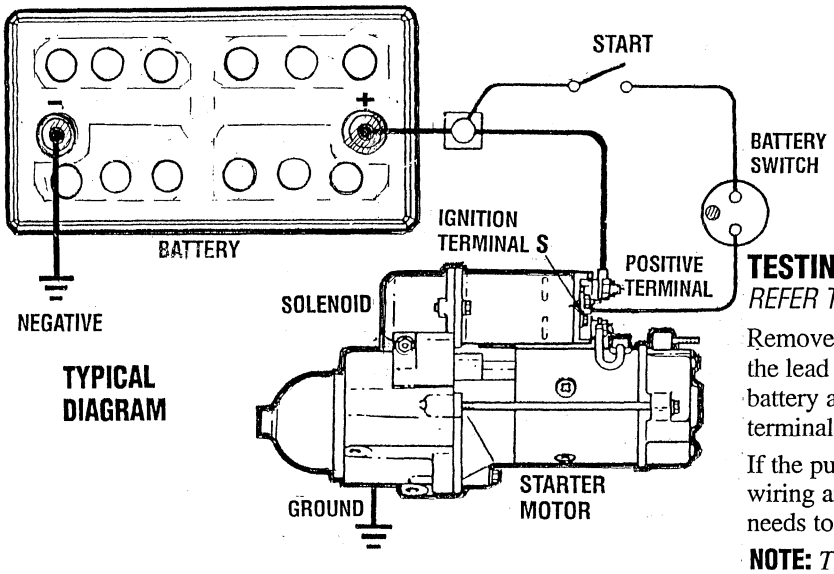

TROUBLESHOOTING/INSPECTION

Prior to testing, make certain the ships batteries are at full charge and that the starting system wiring connections (terminals) are clean and tight. Pay particular attention to the ground wire connections on the engine block.

To check the wiring, try cranking the starter for a few cycles, not more than three crank cycles at a time, then run your hand along the wires and terminals looking for warm spots that indicate resistance. Repair or replace any trouble spots.

Using a multimeter, test the voltage between the positive terminal stud on the start solenoid and the engine block (ground).

If you read 12 volts, the starter is faulty.

If nothing happens at all, the solenoid is not getting current. Check the battery and inspect the wiring connections. It is also possible that the solenoid is defective.

TESTING WITH AN ELECTRICAL JUMPER

REFER TO THE ILLUSTRATION BELOW

Remove the **Terminal S** wire from the ignition and attach the lead from the electrical jumper. Leave the **+ positive** battery attached and clip the jumper aligater fitting to that terminal. The push button should crank the starter.

If the push button fails to crank the starter and the batteries wiring and wired connections have been checked, the starter needs to be removed for service.

NOTE: *This electrical jumper can be **fabricated** using a standard push button and two connecting wires.*

TO REMOVE FOR SERVICE

1. Turn off the DC battery switch.
2. If necessary, remove any components to gain full access to the starter motor.
3. Label and disconnect the wiring from the starter. (Do not allow wires to touch, tape over the terminals).
4. Remove the starter mounting bolts.
5. Remove the starter from the engine. In some cases the starter will have to be turned to a different angle to clear obstructions,

NOTE: *WESTERBEKE uses an ignition proof starter approved by the U.S. Coast Guard. If it is necessary to replace the starter, purchase a new starter from a WESTERBELE dealer/distributor.*

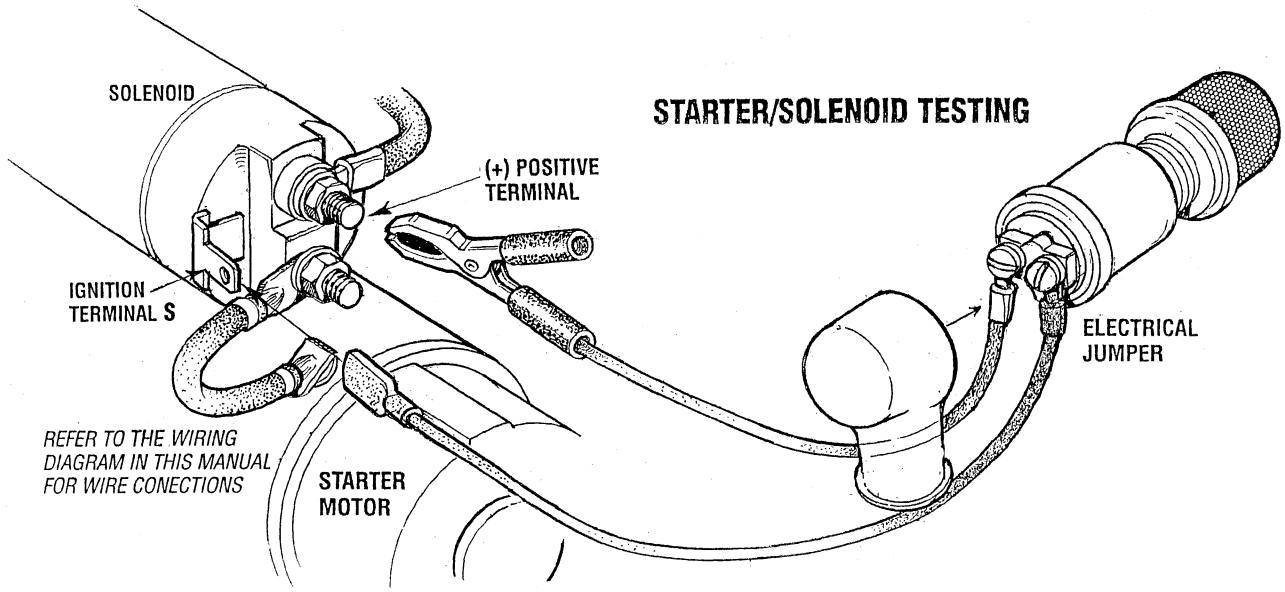

ALTERNATORS TESTING/TROUBLESHOOTING

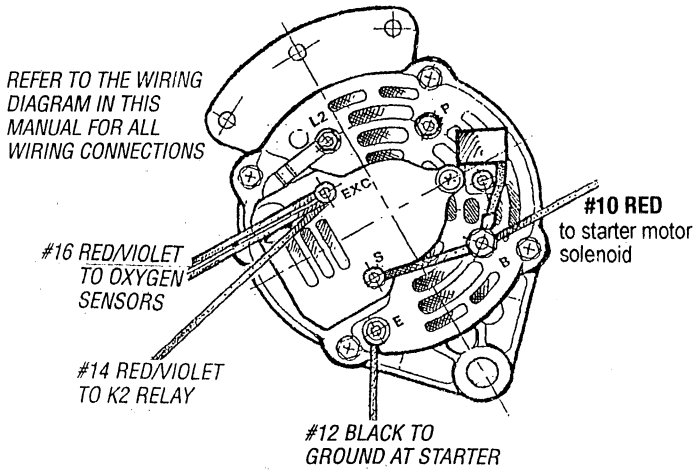

51 AMP ALTERNATOR

DESCRIPTION

The following information applies to the standard alternators that are supplied with WESTERBEKE'S Engines and Generators.

ELECTRICAL CHARGING CIRCUIT

The charging system consists of an alternator with a voltage regulator, an engine DC wiring harness, a mounted DC circuit breaker and a battery with connecting cables. Because of the use of integrated circuits (IC's), the electronic voltage regulator is very compact and is mounted internally or on the back of the alternator.

It is desirable to test the charging system (alternator and voltage regulator) using the wiring harness and electrical loads that are a permanent part of the system and will then provide the technician with an operational test of the charging system as well as the major components of the electrical system.

ALTERNATOR DESCRIPTION

The stator is connected to a three-phase, full-wave bridge rectifier package which contains six diodes. The bridge converts the AC generated in the stator to a DC output for battery charging and accessories,

Power to the regulator and the field of the integral regulator alternator is provided by the field diode (or diode trio) package contained in the alternator.

These alternators produce a rated output of 50 or 51 amps. rated output is achieved at approximately 6000 alternator rpm at an ambient temperature of 75°F (23.8°C). The alternators are designed to operate in an ambient temperature range of -40° to 212°F (-40° to 100°C).

VOLTAGE REGULATOR

The integral voltage regulator is an electronic switching device which senses the system voltage level and switches the voltage applied to the field in order to maintain a proper system voltage.

The regulator design utilizes all-silicon semi conductors and thick-film assembly techniques. After the voltage has been adjusted to the proper regulating valve, the entire circuit is encapsulated to protect the circuit and the components from possible damage due to handling or vibration.

ALTERNATOR TROUBLESHOOTING

Use this troubleshooting section to determine if a problem exists with the charging circuit or with the alternator. If it is determined that the alternator or voltage regulator is faulty, have a qualified technician check it.

> ⚠ **WARNING:** ***A working alternator runs hot. A failed alternator can become very hot. Do not touch the alternator until if has cooled.***

continued

Battery Care

Review the manufacturer's recommendations and then establish a systematic maintenance schedule for your engine's starting batteries and house batteries.

- ☐ Monitor your voltmeter for proper charging during engine operation.
- ☐ Check the electrolyte level and specific gravity with a hydrometer.
- ☐ Use only distilled water to bring electrolytes to a proper level.
- ☐ Make certain that battery cable connections are clean and tight to the battery posts (and to your engine).
- ☐ Keep your batteries clean and free of corrosion.

> ⚠ **WARNING:** ***Sulfuric acid in lead batteries can cause severe burns on skin and damage clothing. Wear protective gear.***

BATTERY

The recommended "dedicated" battery used for the engine's starting 12 volt DC control circuit should be 800-1000 Cold Cranking Amps (CCA) rated.

ALTERNATORS TESTING/TROUBLESHOOTING

PRELIMINARY INSPECTION

Before starting the actual alternator and voltage regulator, testing the following checks are recommended.

1. Make certain your alternator is securely mounted.
2. Check the drive belt for proper tension. Replace the belt if it is worn or glazed.
3. Check that all terminals, connectors and plugs are clean and tight. loose or corroded connections cause high resistance and this could cause overcharging, undercharging or damage to the charging system. Badly corroded battery cables could prevent the battery from reaching a fully charged condition.
4. Check the condition of the battery and charge if necessary. A low or discharged battery may cause false or misleading readings on the in-vessel tests.

   NOTE: *An isolator with a diode, a solenoid, or a battery selector switch is usually mounted in the circuit to isolate the batteries so the starting battery is not discharged along with the house batteries. If the isolator is charging the starting battery but not the house battery, the alternator is Ok and the problem is in the battery charging circuit.*

TESTING THE ALTERNATOR

> ⚠ **CAUTION:** ***Before starting the engine make certain that everyone is clear of moving parts! Keep away from sheaves and belts during test procedures.***

1. **Start the engine.**
2. After the engine has run for a few minutes, measure the starting battery voltage at the battery terminals using a multimeter set on DC volts.
   a. If the voltage is increasing toward 14 volts, the alternator is working; omit Steps 3 through 8 and go directly to "Checking the Service Battery".
   b. If the voltage remains around 12 volts, a problem exists with either the alternator or the charging circuit; continue with Steps 3 through 8.

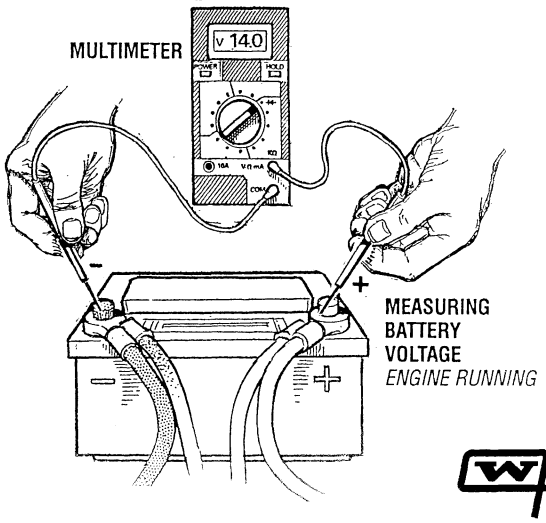

3. **Turn off the engine.** Inspect all wiring and connections. Ensure that the battery terminals and the engine ground connections are tight and clean.
4. If a battery selector switch is in the charging circuit, ensure that it is on the correct setting.
5. **Turn on the ignition switch, but do not start the engine.**
6. Check the battery voltage. If the battery is in good condition, the reading should be 12 to 13 volts.

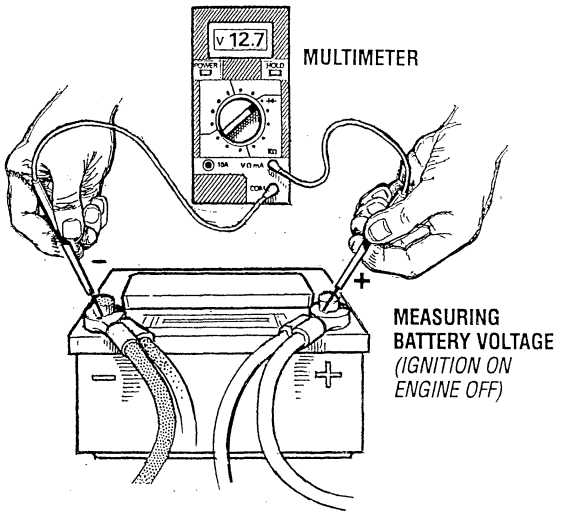

Testing The Output Circuit

1. Connect the positive probe to the output terminal **B** and connect the negative probe to the ground terminal **E** on the alternator.
2. Wiggle the engine wiring harness while observing the voltmeter. The meter should indicate the approximate battery voltage, and should not vary. If no reading is obtained, or if the reading varies, check the alternator output circuit for loose or dirty connections or damaged wiring.
3. **Start the engine.**
4. Repeat the same measurement, the negative probe to **E**, the positive probe to **B** with the engine running. The voltage reading should be between 13.5 and 14.5 volts. If your alternator is over or under-charging, have it repaired at a reliable service shop.
5. If the previous test reads only battery voltage at terminal **B** use the meter to measure the DC excitation terminal. If 12 volts is not present at exciter terminal **R**, inspect the wiring for breaks and poor connections. Jump 12 volts from a 12 volt source (such as the battery) and operate the alternator. If voltage output is 13-14 volts, then the alternator is OK.

ALTERNATORS TESTING/TROUBLESHOOTING

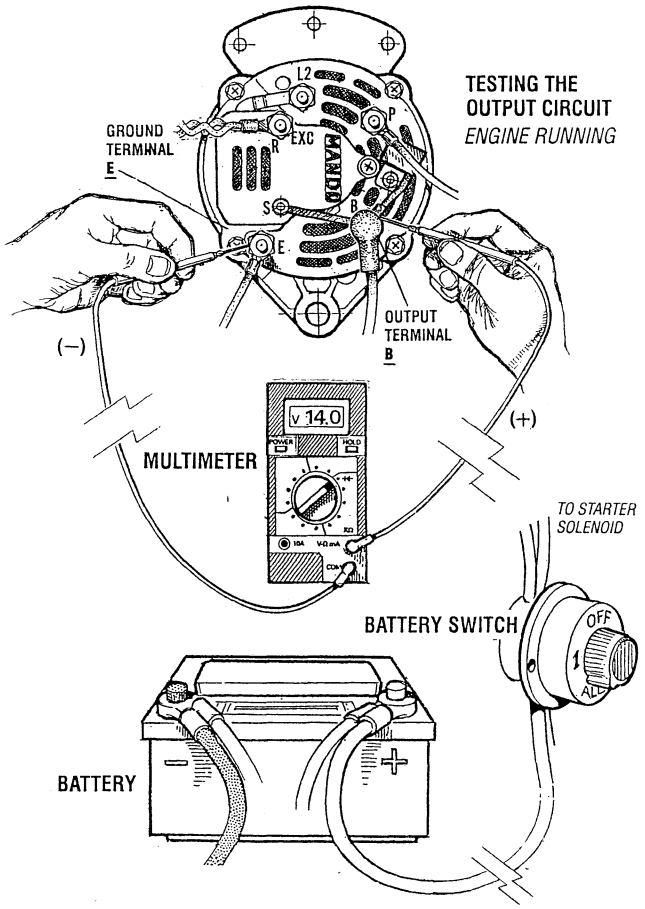

TESTING THE EXCITATION CIRCUIT

1. Connect the positive (+) multimeter probe to the excitation terminal **R** on the alternator and the negative (–) probe to the ground terminal **E** on the alternator.
2. **Turn the ignition switch to the on position** and note the multimeter reading. The reading should be 1.3 to 2.5 volts (see illustration).

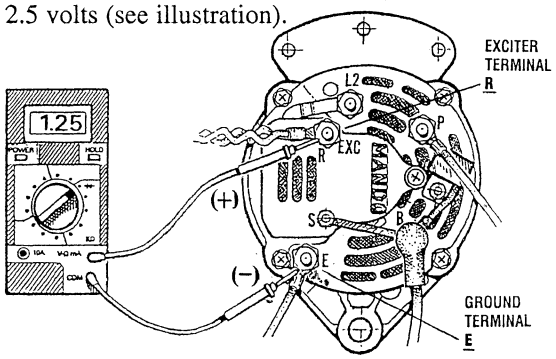

3. **If the reading is between .75 and 1.1 volts,** the rotor field circuit probably is shorted or grounded.
4. **If the reading is between 6.0 and 7.0 volts,** the rotor field circuit probably is open.

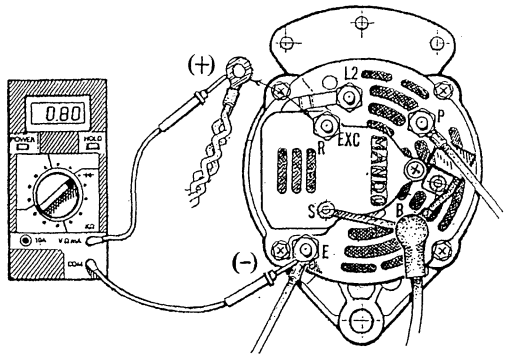

5. **If no reading is obtained,** an open exists in the alternator-excitation lead or in the excitation circuit of the regulator. Disconnect the lead from exc. terminal **R**. Connect the positive multimeter probe to the excitation lead and the negative multimeter probe to ground terminal **E**. If the multimeter now indicates an approximate battery voltage, the voltage regulator is defective and must be replaced. If no voltage is indicated, check the excitation circuit for loose or dirty connections or damaged wiring.

CHECKING THE SERVICE BATTERY

Check the voltage of the service battery. This battery should have a voltage between 13 and 14 volts when the engine is running. If not, there is a problem in the service battery charging circuit. Troubleshoot the service battery charging circuit by checking the wiring and connections, the solenoid, isolator, battery switch, and the battery itself.

When the problem has been solved and before the alternator is back in operation, take the time to tighten and clean the terminal studs. Also clean the connecting terminals from the wiring harness.,

ALTERNATOR REPAIR

If tests indicate a failed alternator, it will need to be disassembled and repaired. Any good alternator service shop can do the job.

NOTE: *Before removing the alternator for repair, use a voltmeter to ensure that 12 volts DC excitation is present at the EXC terminal if the previous test showed only battery voltage at the B output terminal.*

If 12 volts is not present at the EXC terminal, trace the wiring and look for breaks and poor connections.

20KW AND 22.5KW SBEGA GENERATOR
WIRING DIAGRAM #53467

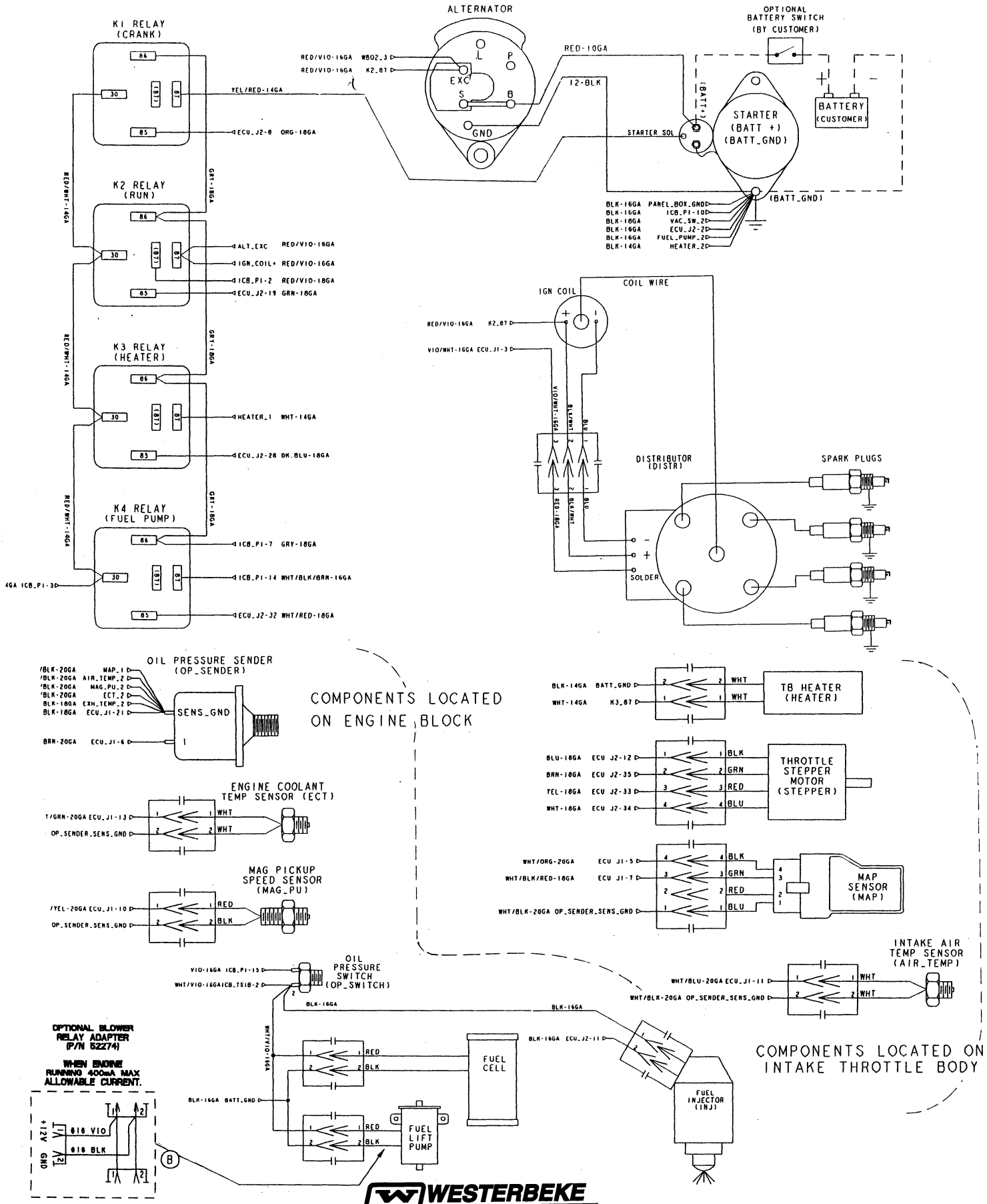

WESTERBEKE
Engines & Generators

20KW AND 22.5KW SBEGA GENERATOR
WIRING DIAGRAM #53467

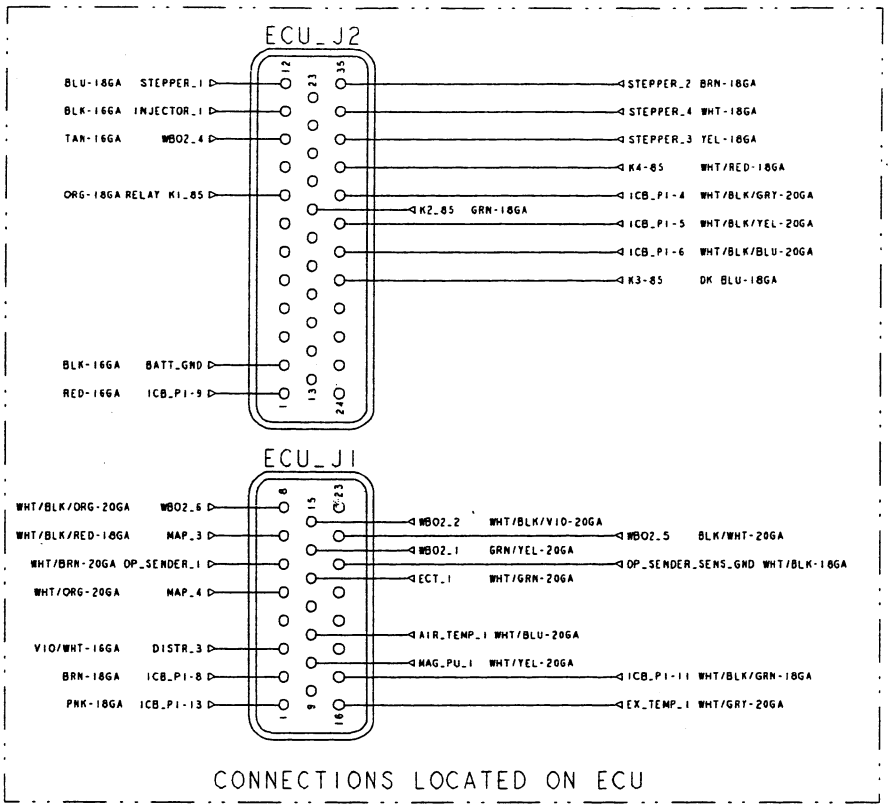

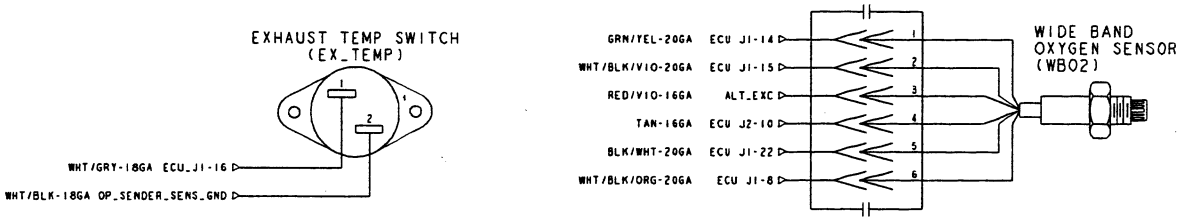

COMPONENTS LOCATED ON EXHAUST SYSTEM

20KW AND 22.5KW SBEGA GENERATOR
WIRING DIAGRAM #53467

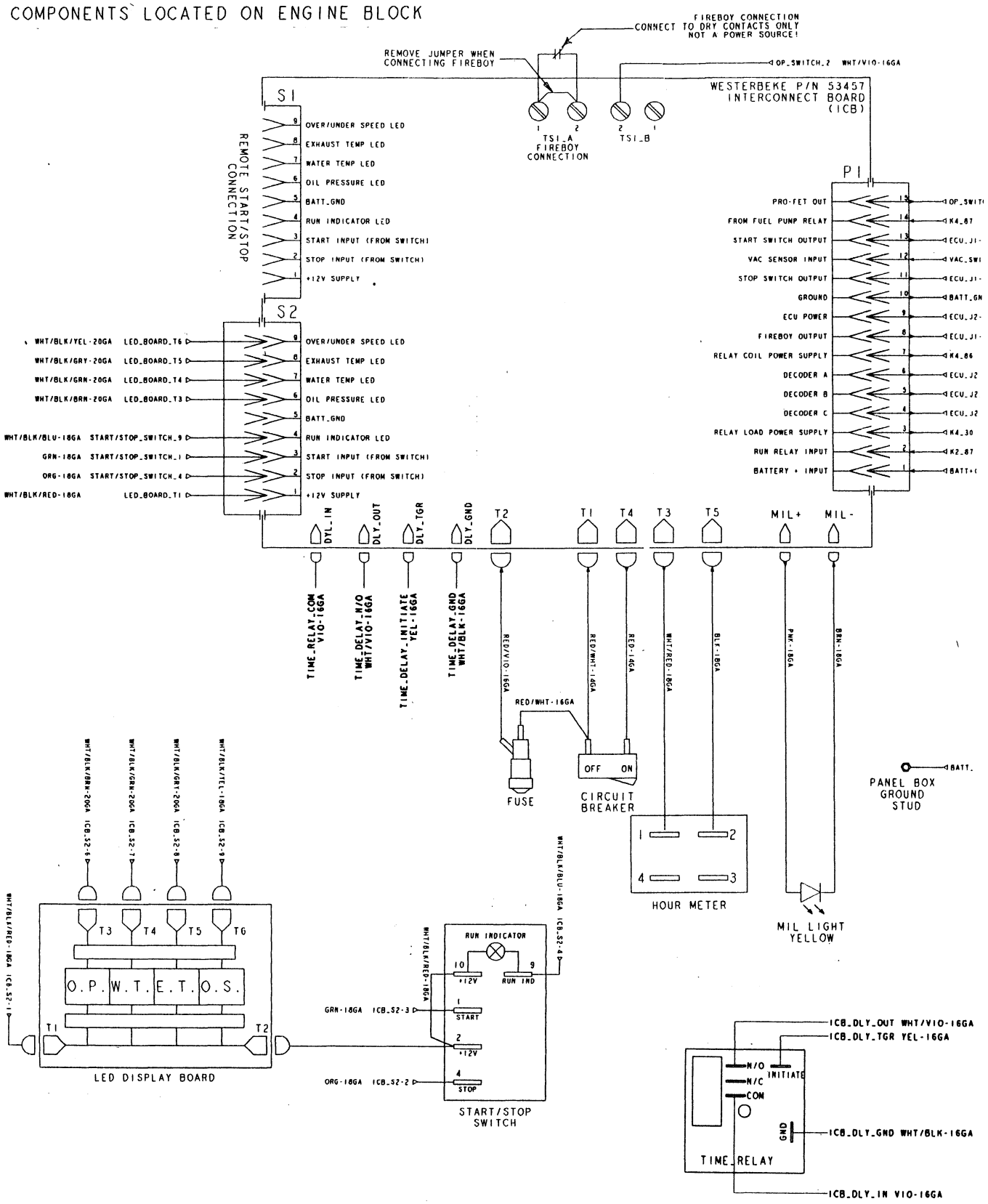

20KW and 22.5KW SBEG GENERATOR

WIRING DIAGRAM #49232

EARLIER MODELS

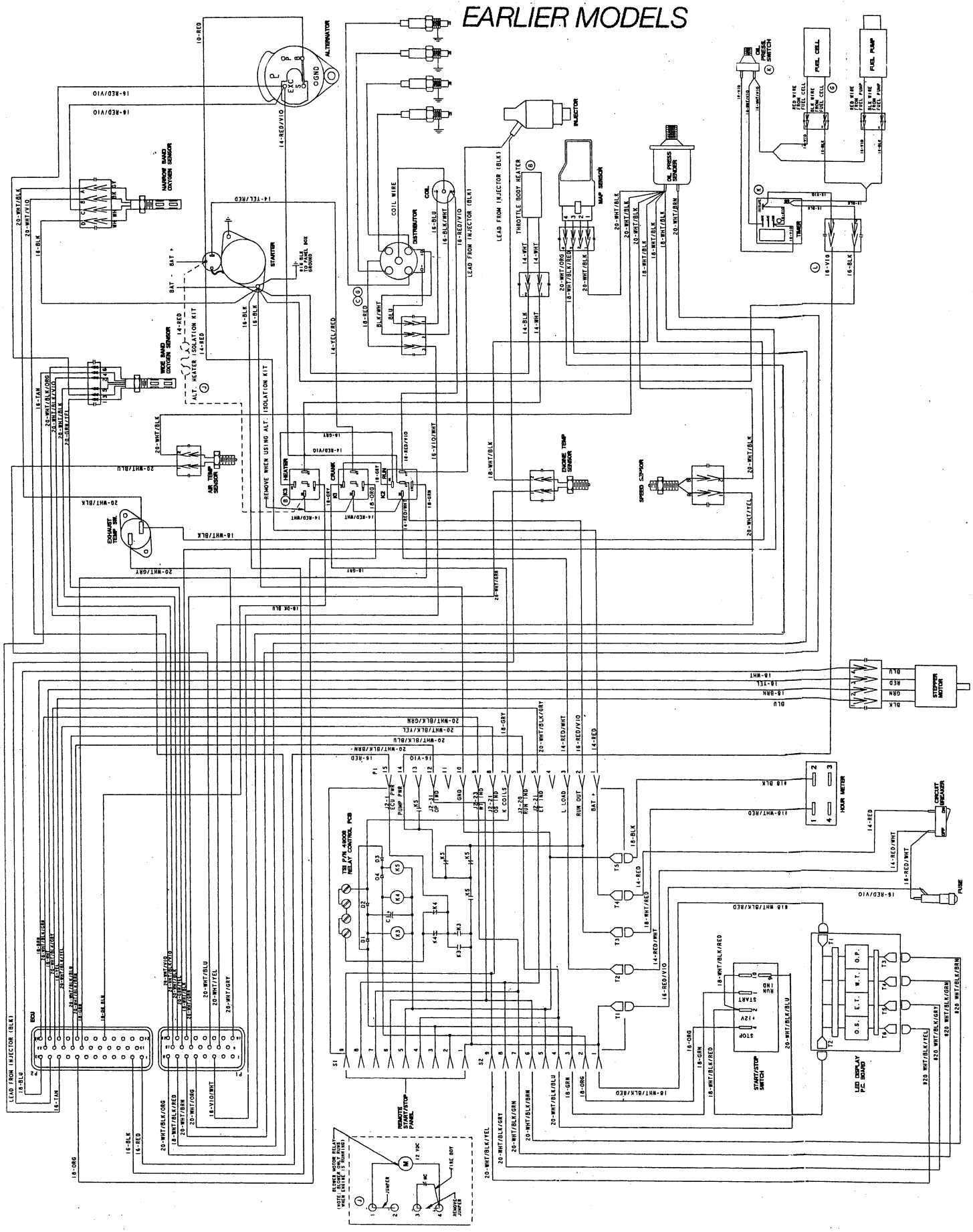

ENGINE TROUBLESHOOTING

The following troubleshooting tables are based upon certain engine problem indicators and the most likely causes of the problems.

When troubleshooting indicates an electrical problem, see the *ELECTRICAL SYSTEM WIRING DIAGRAM* as these may reveal other possible causes of the problem which are not listed below.

NOTE: *The engines control system (electrical) is protected by a 15 amp circuit breaker and a 8 amp buss fuse located on the control panel. The generator has an AC circuit breaker at the control panel which should be in the off position when performing troubleshooting.* .

⚠ CAUTION: *When servicing or replacing DC components. turn off the 20 amp DC circuit breaker.*

PROBLEM	PROBABLE CAUSE
Engine does not crank.	**1.** Voltage drop at starter solenoid terminal. **2.** Engine circuit breaker has tripped. **3.** 8 amp fuse/holder is faulty. **4.** Battery is low or dead. **5.** Loose battery connections. **6.** Faulty wire connection. **7.** Faulty start switch. **8.** Faulty starter relay. **9.** Faulty starter solenoid. **10.** Raw water filled cylinders.
Engine starts, runs but then shuts down.	**1.** Faulty shutdown switch. (oil pressure, coolant or exhaust temperature). **2.** Dirty fuel/water separator filter. **3.** Faulty speed sensor. **4.** Low oil level in sump. **5.** Faulty fuel pump. **6.** High engine water or exhaust temperature. **7.** Air in the fuel system.
Engine starts, runs but does not come up to speed.	**1.** Faulty mag. pick-up sensor. **2.** ECU faulty. **3.** Fuel pump. **4.** Fuel supply to engine restricted. **5.** Throttle actuator binding. **6.** Actuator or electrical connections faulty. **7.** AC generator overload./short. **8.** Air intake restricted. **9.** Exhaust restricted. **10.** Air in fuel system.

PROBLEM	PROBABLE CAUSE
Engine cranks but fails to start.	**1.** Out of fuel. **2.** Bad ignition coil. **3.** Faulty spark plug. **4.** Unplugged distributor wire. **5.** Faulty electrical connection. **6.** Air in the fuel system.
Engine hunts.	**1.** ECU gain adjustment needed. **2.** Faulty fuel pump. **3.** Mag. pick-up sensor needs adjustment. **4.** Low DC battery voltage. **5.** Generator overload. **6.** Valves need adjustment.
Engine misfires.	**1.** Poor quality fuel. (lower than 89). **2.** Incorrect timing. **3.** Dirty flame arrester. **4.** Cracked distributor cap. **5.** Faulty ignition wires. **6.** Throttle actuator linkage binding. **7.** High exhaust back-pressure. **8.** Valve clearances are incorrect.
Engine backfires.	**1.** Spark plug wires are connected wrong. **2.** Incorrect timing. **3.** Dirty flame arrester. **4.** Cracked distributor cap. **5.** High exhaust back-pressure.
Engine overheats.	**1.** Coolant loss. Pressure test cooling system. Refill. **2.** Faulty raw water pump impeller. **3.** Belts are loose or broken. **4.** Raw water pump worn. **5.** Faulty thermostat. **6.** Heat exchanger restricted.

ENGINE TROUBLESHOOTING

PROBLEM	PROBABLE CAUSE
Low oil pressure.	1. Low oil level. 2. Wrong SAE type oil in the engine. 3. Faulty or wrong type oil filter. 4. Relief valve is stuck. 5. Faulty oil pump. 6. Faulty engine bearings. 7. Faulty oil filter.
High oil pressure.	1. Dirty oil or wrong SAE type oil in the engine. 2. Relief valve is stuck.
No DC charge to the starting battery.	1. Loose/corroded battery charge circuit connection(s). 2. Faulty alternator regulator. 3. Faulty DC alternator. 4. Slipping alternator drive belt. 5. Broken alternator drive belt.

PROBLEM	PROBABLE CAUSE
Blue exhaust smoke discharge from the engine.	1. Lube oil is diluted. 2. High lube oil level. 3. Crankcase breather hose is clogged. 4. Valves are worn or adjusted incorrectly. 5. Piston rings are worn or unseated.
Black exhaust smoke discharge from the engine.	1. Dirty flame arrester. 2. Lube oil is diluted. 3. Valves are worn or incorrectly adjusted. 4. Piston rings are worn or unseated. 5. Cankcase breather hose is clogged.
Poor Performance at generator speed.	1. Fuel pump clogged. Remove and replace. 2. Throttle body filter screen dirty. 3. Fuel filter contaminated.

CHECK ENGINE LIGHT (YELLOW)

When the **Check Engine Light** is illuminated, the PC Interface Diagnostics will indicate the problem.

NOTE: *To properly troubleshoot the **Check Engine Light**, the PC Interface Diagnostics MUST be used to properly determine the fault cause.*

PROBLEM	PROBABLE CAUSE
WideBand O^2 Sensor.	1. Sensor Failure. 2. Sensor wiring issue.
Crossing Stoich.	1. Sensor failure. 2. Sensor wiring issue. 3. Air intake obstructed.
O^2 Sensor out of range.	1. Air intake obstructed.

NOTE: *To extinguish the **Check Engine Light** once the fault is corrected. The unit must be put through three (3) consecutive successful start and stop sequences, each having a run period of approximately four (4) running minutes.*

If your product is equipped with OBD (on board diagnostics) go to www.WESTERBEKE.COM and follow the free interface software download instructions specific to your engine to obtain and install the appropriate diagnostic software. The following is a list of OBD compliant products:

20.0 SBEGA
22.5 SBEGA

To sample exhaust emissions on installed OBD compliant generators, gain access to the exhaust stream by removing the test port plug on the exhaust elbow. Be sure to reinstall the plug securely when testing is complete.

ELECTRICAL TROUBLESHOOTING CHART

The following test procedures will require the use of a multimeter and the engine's wiring diagram (in this manual). Also refer to the relay testing page. WESTERBEKE recommends that these tests be performed by a qualified technician.

CAUTION: When servicing or replacing DC components, turn off the 20 amp DC circuit breaker.

PROBLEM	TESTING *(12 VDC is battery + voltage measured to ground)*	INSPECTION/SOLUTION
Engine does not crank.....	Test for B+ (12v) at the circuit breaker to the PC board terminal T4. **If OK ↓**	Check for bad connections at the engine harness connector P1, Pin 1, the #14 red wire, or at the battery + on the starter. Check the connections at the PC board terminal 4 and at the circuit breaker
	Test for B+ (12v) at the circuit breaker to the panel fuse end and to the PC board terminal T1. **If OK ↓**	Look for a bad connection from the circuit breaker to the fuse or at the PC board terminal T1. Replace the circuit breaker.
	Test for B+(12v) from the fuse end to the PC board terminal T2. **If OK ↓**	Inspect the connections at the fuse or PC board terminal T2. Replace the fuse.
	Test for B+(12v) at the crank relay K1 terminal 30. **If OK ↓**	Check for a bad connection at the engine harness connector P1, pin #3. Check the DC voltage at terminal #30 at the K1, K2, K3 and K4 relays.
	Test for B+ (12v) at the start/stop switch terminals 2 and 10. **If OK ↓**	Look for bad connections at the panel connector S2, pin 1, white/black/red wire to the terminal PC board or at the start/stop switch terminals 2 and 10.
	Test for B+ (12v) at the start switch terminal 1 when the switch is activated. **If OK ↓**	Replace the start switch.
	Test for B+ (12v) at crank relay K1, terminal 86. **If OK ↓** **If OK ↓**	Check bus fuse (8 amp).
	Test for B+(12v) at crank relay K1 terminal 85. Activate the start switch and after a few seconds the voltage should drop below .5 volts. **If OK ↓**	Inspect for a bad connection at relay K1 terminal 8 orange wire or at ECU connector J2, Pin #8
	Activate the start switch, after 4-5 seconds B+(12v) should be present at terminal 87 on relay K1. **If OK ↓**	Look for a bad connection at relay K1.
	Activate the start switch, after 4-5 seconds check for B+(12v) at the start solenoid. **If OK ↓**	Look for a bad connection at crank relay K1, terminal 85 orange wire or at the ECU connector J2, pin #8.
	Inspect the starter.	Check the connections at crank relay K1 terminal 87, yellow/red wire or at the start solenoid.
Engine cranks but fails to start...	Test for B+ (12v) at terminals 30 and 86 on the K2 run relay **If OK ↓**	Check for bad connections at both terminals. Replace the K2 relay.
	Test for B+ (12v) at run relay K2, terminal 85 and activate the start switch. Voltage should be less than 5 volts. **If OK ↓**	Inspect the connections at relay K2, terminal 85, or at the ECU connector J2, pin 19.
	Activate the start switch, test for B+(12v) at relay K2 run relay, terminal 87.	Replace the K2 relay.

NOTE: *For other possible causes (failure to start) such as fuel pump, speed sensor (MPU), ignition, etc, refer to the these sections in this manual.*

ELECTRICAL TROUBLESHOOTING CHART

The following test procedures will require the use of a multimeter and the engine's wiring diagram (in this manual). Also refer to the relay testing page.WESTERBEKE recommends that these tests be performed by a qualified technician.

PROBLEM	TESTING *(12 VDC is battery + voltage measured to ground)*	INSPECTION/SOLUTION
Engine cranks but fails to start...	Test for B+ (12v) at terminals 30 and 86 on the K2 run relay **If OK ↓**	Check for bad connections at both terminals. Replace the K2 relay.
	Test for B+ (12v) at run relay K2, terminal 85 and activate the start switch. Voltage should be less than 5 volts. **If OK ↓**	Inspect the connections at relay K2, terminal 85, or at the ECU connector J2, pin 19.
	Activate the start switch, test for B+(12v) at relay K2 run relay, terminal 87.	Replace the K2 relay.
	NOTE: *For other possible causes (failure to start) such as fuel pump, speed sensor (MPU), ignition, etc, refer to the these sections in this manual.*	
Engine starts, runs but shuts down.....	Test for voltage across the oil pressure sensor terminals, with the engine running voltage should be less than 1.0 volts. **If OK ↓**	Faulty oil pressure sensor. Replace sensor/switch.
	Test for voltage across the exhaust temperature switch, when the engine shuts down, it should read zero (0) volts. **If OK ↓**	Faulty exhaust temperature switch. Replace switch. Loss of coolant thru exhaust elbow. High exhaust temperature.
	The engine temperature sensor maybe faulty. **If OK ↓**	Test sensor, refer to component testing in this manual.
	Fireboy suppression circuit maybe faulty.	By-pass Fireboy connection at terminal block. Install a jumper between #4 and #3.

IMPORTANT
SYSTEM MONITORING SOFTWARE AND DATA LOGGING

CONTINUED →

A diagnostic Software Kit #055410 is available through your Westerbeke Master Distributor. The Master Distributor can be located on the Westerbeke website at www.westerbeke.com. An interconnect cable is provided with the kit to connect between the ECU in the generator's control box and your laptop to use this software.

The software will be a very important tool for monitoring system operation to ensure the system is operating at its optimum. Also for locating any operating issue and for the very important task of Data Logging used to help determine a cause for engine/system malfunction. For the models listed in this manual, the engine MUST be running for the software to communicate with the system ECU. When troubleshooting an engine/system malfunction, start data Logging as soon as the engine is started and running. Then view the data being displayed in the various boxes on the PC Interface.

The Data file can be opened in most speadsheet forms such as Microsoft Excel.

After installing the PC Interface Software on your laptop, shut OFF the DC breaker on the generator's control box. Attach one end of the communications cable to one of your laptop ports and attach the other end to the 10 pin connector on the ECU. Make sure the **arrow** on the communications cable plug is facing towards the ECU harness connection plugs.

Turn ON your laptop and the DC breaker on the control box.

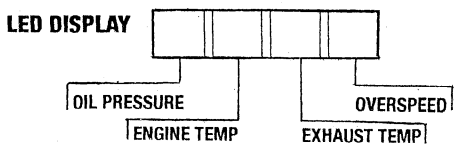

DATA LOGGING (TROUBLESHOOTING AID)

Test procedures for Data Logging with Gasoline Diagnostic Software-PC Interface

DESCRIPTION

The Diagnostic software is a valuable tool in diagnoising engine problems. It should not replace basic troubleshooting techniques or common sense. Some of our products such as the 5.0 and 6.5 SBEG and 8.0 to 14.0 SBEG, along with non-OBD 20.0 and 22.5 SBEG do no have an idle mode. That means that the engine must be running before the PC interface can begin communication. Models such as the OBD versions like 20.0 and 22.5 SBEGA do have an idle mode and PC interface can begin communications before the engine is actually running. Once you have determined which type you have, the following procedures will help gather valuable information.

Start off by collecting data from the time that the engine is started. If you have a genset that has the idle mode, start the PC interface communicating and data logging before you start the engine. If you have an engine that does not have an idle mode, start the PC Interface as soon as possible after the engine is running. Let the engine warm up for about 10 to 15 minutes before trying to apply an AC load. Monitor and record AC volts and amps if possible.

After the engine is warmed up, start applying an AC load by turning on various devices. Let the unit run at each load change for a couple of minutes so that the unit is stable. Monitor and record AC volts and amps if possible at each load site. Continue to as AC load until the unit is at or near full power rating. Power is determined by multiplying the AC voltage times the AC amperage. This will determine if the unit is overloaded or not.

After loading up the genset, begin to reduce the AC load. Allow the unit run at each load site for a couple of minutes to stabilize. Continue to reduce the AC load and monitor voltage and amperage until there is no AC load on genset. This will give a technician a baseline of what is happening when the engine is running under a controlled load condition.

Finally, after running the controlled baseline test, this might sound strange, but sometimes the customer might know a particular scenario that will cause a problem for the unit. Sometimes we hear customers say that the unit runs fine for awhile and when the air conditioner shuts off, something happens. Try repeating the scenario that the customer mentions. Always start by recording date from the start up for a least a couple of minutes with no load on the generator to get a starting point. Then continue to record data until the problem shows up.

If you have a unit with no *idle mode*, and the unit shut down under some kind of fault, the date log will automatically stop and save the file. If you have a unit with an *idle mode*, and the unit was to shut down under some kind of fault, you will have to manually stop the data log to save it. Or in the case of shutting of the DC circuit breaker, this will also cause the date log to stop and save itself.

USING THE DATA

All of the data that is being recorded is also being displayed on the PC Interface in the various boxes. The following information applies whether you are looking at the data file after it has been recorded or watching it live in the PC Interface. The data file can be opened in most spreadsheet software such as Microsoft Excel.

The data that is being collected is self explanatory and simple to follow. For example, the engine temp, air temp, oil pressure, and battery volts would be easy to understand, other items may be less familiar.

Speed

Simple enough, this is the speed that the engine is running. If the genset is set up to operate at 60 Hz, then the engine needs to run at 1800 rpm (belt driven units may be different). If the unit is set up for 50 Hz operation then the engine speed will be 1500 rpm.

When a genset is governing properly, you should see reading slightly above and below the desired speed. Even a well tuned engine will vary a little. The point is you should see readings above and below the desired speed. If you see speed readings remain more than 20 rpm above or below the desired speed for a prolonged period of time, there could be a problem, especially if this is noticed with no AC load applied.

If the speed is too high with no AC load applied, check the data box labeled Stepper Pos. (steps). The throttle is controlled by a stepper motor. Usually the step count for the engine running with no AC load is typically in the 20-30 steps range. A couple of steps above or below this range does not indicate a problem. However, if the step count is in the single digit numbers or even showing a zero, the problem maybe that the throttle body assembly may be out of calibration or not functioning properly. The stepper motor can only go to a position that it thinks is zero. If the calibration is off, the stepper cannot move the throttle closed enough to slow the engine down. An engine that has this problem will run at the proper speed once some AC load has been added. However, when that load is dropped, the speed will be too high, and in some cases may cause the engine to over-speed and shut down.

If the engine speed is too low with no AC load applied, there is probably a totally different problem. Again, look at the Stepper Position. Is the speed low but steps are high? This would mean that the throttle is being opened to compensate for loss of speed but the speed is not coming up. Check to make sure that the fuel level is full in the fuel system (no air) and that the fuel is good and the filters are clear. Check to make sure that the air intake screens are clean. Check to make sure that the spark plugs have not fouled. Bleed the fuel system to remove any air.

If the engine speed is okay when running with no AC load, but once underway with some AC load being aplied the speed drops and stays below the desired speed, first check the AC power by multiplying the total AC amperage times the AC volts to get the kilowatts. If this number is higher than what the unit is rated for, then it is overloaded., Shut off some of the devices until the speed returns to normal and check the power again. If there is only a small AC load applied and the speed cannot maintain, follow the same suggestions from the previous paragraph.

Pressure (kPa)

This is the pressure that exists in the intake manifold. At no-load, the kPa will be lower than at full load. The wider the throttle plate is open, the closer it gets to atmosphere which is about 100 kPa. Typically a genset running at no-load will see a kPa value around 30, while at full load it would be around 90 kPa. If the kPa is stuck at 70 and never moves then there is a problem with either the MAP sensor or the wiring to the MAP sensor, as 70 is a default value that is in the code.

WB Heater Set-point

This is the set-point in millivolts of the heater temperature in the Wideband 02 Sensor. Curently in all the units that do not have an *idle mode*, the set point is 893. In other units the set-point will vary but wll be displayed in this box.

WB Current Temp

This is the actual value in millivolts of the heater temperature in the Wideband 02 Sensor. If the heater is working properly, you will typically see values stay within 20 millivolts of the set-point. The higher the number is, the colder the heater is. Typically a reading in the 4000 area means that the heater is not working at all. If the value is swinging dramatically above and below the set-point, the sensor is probably failing. The sensor should be replaced.

Lambda

Lambda represents the ratio of the amount present in a combustion chamber compared to the amount that should have been present in order to obtain "perfect" combustion. Thus, when a mixture contains exactly the amount of oxygen required to burn the amount of fuel present the ratio will be one to one and lambda will equal 1,000. If the mixture contains too much oxygen for the amount of fuel (a lean mixture), lambda will be greater then 1,000. If a mixture contains too little oxygen for the amount of fuel (a rich mixture), lambda will be less than 1,000.

Perfect combustion requires an air/fuel ratio of approximately 14.7:1 (by weight) under normal condtions. Thus a lean air/fuel ratio of, say, 16:1 would translate to a lambda value of 1.088. (To calculate, divide 16 by 14.7.) A lamba of .97 would indicate an air/fuel ratio of 14.259:1 (derived by multiplying .97 by 14.7).

In these applications lambda readings should be 1,000. Because of the combustion involved this number will constantly be changing, ideally you should see the value of lambda fluctuating slightly above and below the 1,000 target.

Immediately after a startup, it is typical to see a rich readings for lambda. This is part of the startup process and usually takes a couple of minutes for sensors to warm up and take control of the air fuel mixture.

If you see a problem in this area first check the Wideband heater values to make sure that the heater is working. Remember that it takes about three minutes after starting an engine for it to be totally in control. Physically remove the sensor and check it for corrosion and build up of deposits from the water being injected through the exhaust. Salt water deposited on the sensor will be very damaging. If there is any evidence of build up, replace the sensor. Determine the cause for raw water getting on this sensor.

After checking the senor and the genset is running too rich, check the air intake screens and spark plugs to make sure they are clean and functioning properly. If the genset is running too lean, check the fuel levels and the quality of the fuel. Water in the gas is no good and will cause the genset to run lean.

Ip Current

Is the electrical value equivalent of the lambda reading. There is not much to learn from this number.

Lambda PW Trim

Is the fueling trim precentage that the wideband oxygen sensor is contributing. In most cases 15% is the maximum.

Wideband P, I & D Term

These values are the Wideband Sensor Heater Temperature control terms. These values will be constantly changing. It is more important to look at the WB Current Temp value.

Lambda P & I Term

These values are the lambda value controlling terms. Their job is to keep the lambda reading at 1,000 enriching or leaning the fueling.

NB STT (Narrowband Short Term Trim)

If your genset is equipped with a narrowband oxygen sensor, this will be the value of its contribution. Maximum contribution is 1%.

Stepper Pos (steps)

The throttle shaft is controlled by a stepper motor. The value displayed is in steps, zero steps being the closed position. Most units will run at no load in the 20 to 30 steps range, these values will vary from engine to engine.

Pulse Width

This is the fueling duration in milliseconds (ms). The value will be lower at no load than at full load.

Main Fuel Comp (%)

This is the fueling compensation that is derived from a value in the fuel table, which is based on the engine rpm and the MAP pressure.

Air Temp and Engine Temp Comp (%)

This is the fueling compensation based on the air temperature and engine temperature. This value can be both positive and negative. This value is added or subtracted from the main fuel compensation value.

Speed P, I & D Terms

These values reflect the engine speed governing process. These values are constantly changing and it is very hard to get any information from them, you should see these values constantly changing. If for some reason there are all zeroes in these columns than the engine is probably not running.

De-rated P Term

This code provided for the P(Proportional) Term, in the speed PID control, to be de-rated right after start-up for a short period of time. This allows the engine to warm up without having an aggressive P value which could cause hunting or instability when the engine is cold. On some older units there is also a trim pot on the top on the EUC that can manually de-rate the P value. This will be reflected in this box.

Frequency Option

This the value of the speed selector on the ECU, whether it is 50 or 60 Hz. Some interfaces may not show this column but will display the Frequency Option in the Title area at the top on the data log.

The Generator Frequency

The Generator Frequency is a function of engine speed. For most applications, 50 Hz operation is with an engine speed of 1500 rpm, while 60 Hz operation is with an engine speed of 1800 rpm.

NOTE: *Belt drive applications will be different, check your owner's manual for engine speed.*

GENERATOR INFORMATION

USE OF ELECTRIC MOTORS

The power required to start an electric motor is considerably more than is required to keep it running after it is started. Some motors require much more current to start them than others. Split-phase (AC) motors require more current to start, under similar circumstances, than other types. They are commonly used on easy-starting loads, such as washing machines, or where loads are applied after the motor is started, such as small power tools. Because they require 5 to 7 times as much current to start as to run, their use should be avoided, whenever possible, if the electric motor is to be driven by a small generator. Capacitor and repulsion-induction motors require from 2 to 4 times as much current to start as to run. The current required to start any motor varies with the load connected to it. An electric motor connected to an air compressor, for example, will require more current than a motor to which no load is connected.

In general, the current required to start 115-Volt motors connected to medium starting loads will be approximately as follows:

MOTOR SIZE (HP)	AMPS FOR RUNNING (AMPERES)	AMPS FOR STARTING (AMPERES)
1/6	3.2	6.4 to 22.4*
1/4	4.6	9.2 to 32.2*
1/3	5.2	10.4 to 72.8*
1/2	7.2	14.4 to 29.2*
3/4	10.2	20.4 to 40.8*
1	13	26 to 52

***NOTE:** *In the above table the maximum Amps for Starting is more for some small motors than for larger ones. The reason for this is that the hardest starting types (split-phase) are not made in larger sizes.*

Because the heavy surge of current needed for starting motors is required for only an instant, the generator will not be damaged if it can bring the motor up to speed in a few seconds. If difficulty is experienced in starting motors, turn off all other electrical loads and, if possible, reduce the load on the electric motor.

REQUIRED OPERATING SPEED

Run the generator first with no load applied, then at half the generator's capacity, and finally loaded to its full capacity as indicted on the generator's data plate. The output voltage should be checked periodically to ensure proper operation of the generating plant and the appliances it supplies. If an AC voltmeter or amp meter is not installed to monitor voltage and load, check it with a portable meter and amp probe.

NOTE: *When the vessel in which the generator is installed contains AC equipment of 120 volts only, it is recommended that the generator's AC terminal block be configured to provide one 120 volt AC hot leg for the vessel's distribution panel. This will ensure good motor starting response from the generator.*

Generator Maintenance

- Maintaining reasonable cleanliness is important. Connections of terminal boards and rectifiers may become corroded, and insulation surfaces may start conducting if salts, dust, engine exhaust, carbon, etc. are allowed to build up. Clogged ventilation openings may cause excessive heating and reduced life of windings.
- For unusually severe conditions, thin rust-inhibiting petroleum-base coatings should be sprayed or brushed over all surfaces to reduce rusting and corrosion.
- In addition to periodic cleaning, the generator should be inspected for tightness of all connections, evidence of overheated terminals and loose or damaged wires.
- The drive discs on single bearing generators should be checked periodically if possible for tightness of screws and for any evidence of incipient cracking failure. Discs should not be allowed to become rusty because rust may accelerate cracking. The bolts which fasten the drive disc to the generator shaft must be hardened steel SAE grade 8, identified by 6 radial marks, one at each of the 6 corners of the head.
- The rear armature bearing is lubricated and sealed; no maintenance is required. However, if the bearing becomes noisy or rough-sounding, have it replaced.
- Examine bearing at periodic intervals. No side movement of shaft should be detected when force is applied. If side motion is detectable, inspect the bearing and shaft for wear. Repair must be made quickly or major components will rub and cause major damage to generator.

AC CIRCUIT BREAKER

The AC Breaker is mounted on the control box. This is where the AC connections from the ships service connect to the generators AC output. The breaker helps protect the generator from an amperage overload. Should an overload occur, the breaker will trip, disconnecting the AC amperage load from the vessel. The breaker must be manually re-set to re-connect the ships service.

Disconnect this breaker when performing maintenance/repair to the generator.

Breaker Part no.

20Kw.....#042300 *22.5Kw.....#039493*
16Kw.....#042718 *18Kw.....#052606*

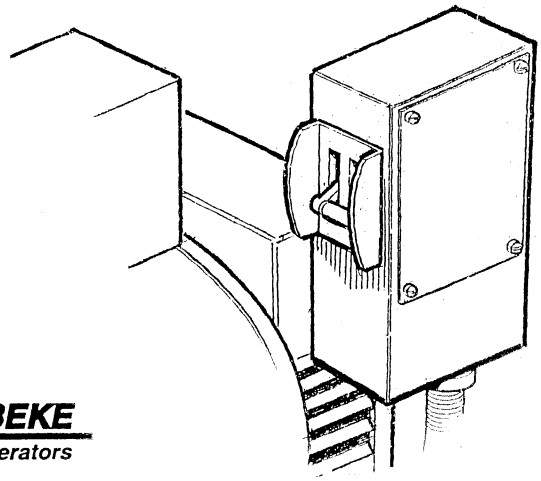

THE SBEG GENERATOR
SINGLE AND THREE PHASE

DESCRIPTION

This generator is a four-pole, brushless, self-excited generator which requires only the driving force of the engine to produce AC output. The copper and laminated iron in the exciter stator are responsible for the self-exciting feature of this generator. The magnetic field produced causes an AC voltage to be induced into the related excitor rotor windings during rotation. Diodes located in the exciter rotor rectify this voltage to DÇ and supply it to the windings of the rotating field. This creates an electromagnetic field which rotates through the windings of the main stator, inducing an AC voltage which is supplied to a load. An AC voltage is produced in the auxiliary windings of the main stator and is, in turn, supplied to a voltage regulator. The regulator produces a DC voltage to further excite the exciter stator windings, enabling the generator to produce a rated AC output. The voltage regulator senses AC voltage output and adjusts DC excitation to the exciter stator winding according to amperage load the generator is furnishing to maintain a constant voltage output.

CIRCUIT BREAKER

A circuit breaker is installed on all WESTERBEKE generators. This circuit breaker will automatically disconnect generator power in case of an electrical overload. The circuit breaker can be manually shut off when servicing the generator to ensure that no power is coming into the boat.

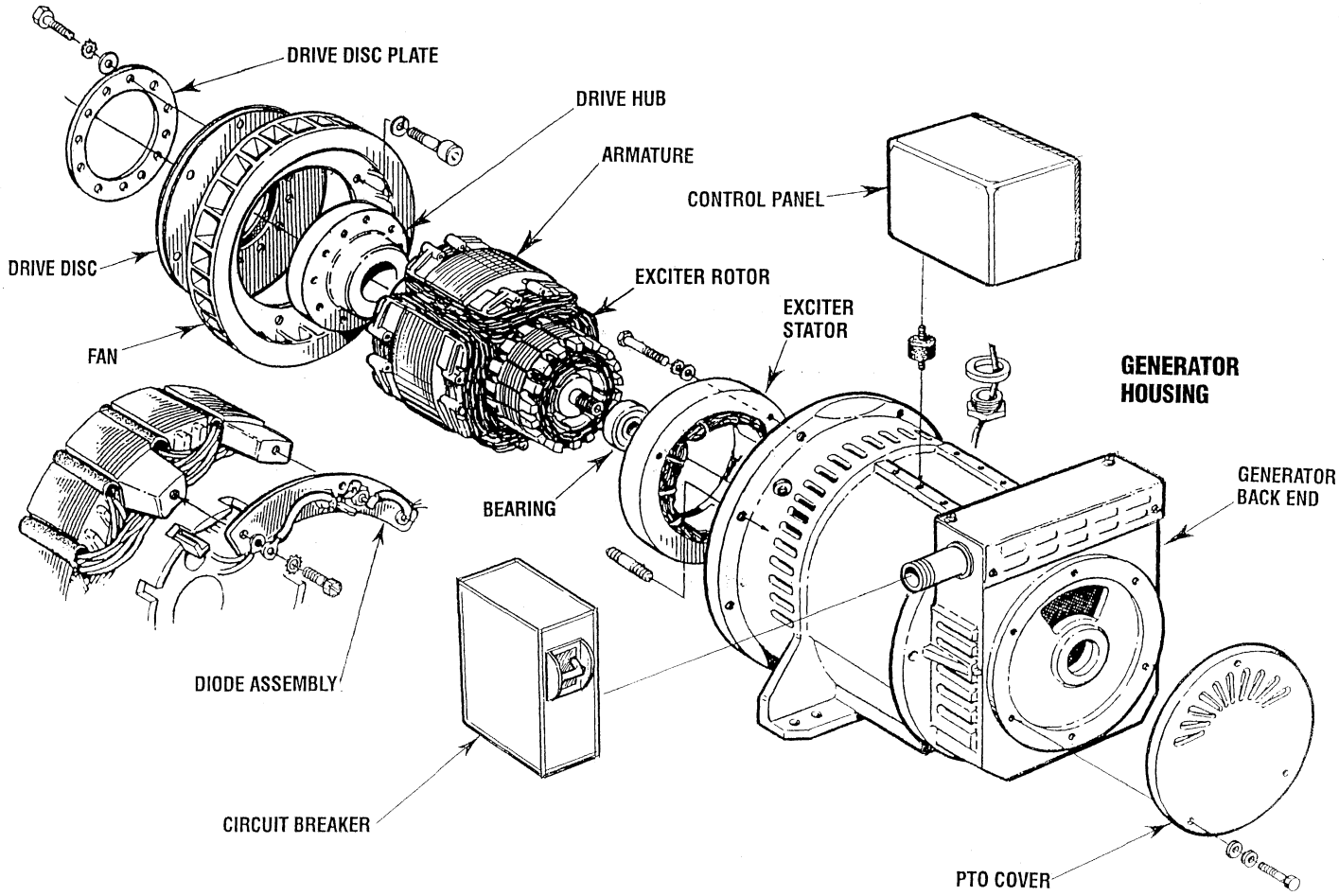

VOLTAGE REGULATOR ADJUSTMENTS

Description

The voltage regulator is an advanced design which ensures optimum AC alternator performance. It is equipped with complete protection circuitry to guard against operating conditions that could be detrimental to the AC alternator.

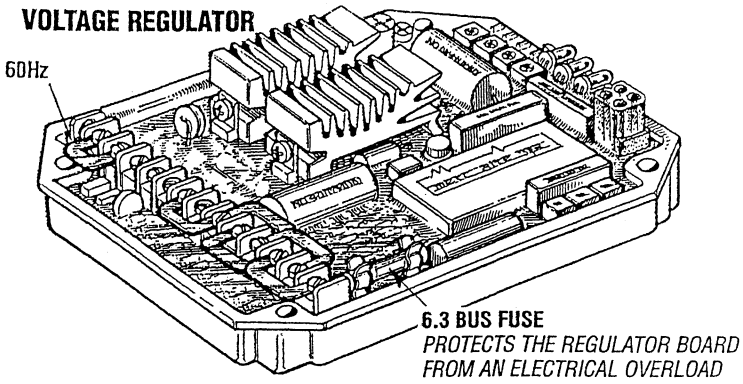

Volts

This potentiometer is used to adjust output voltage. At proper engine operating speed the output voltage should be held at ±1% from a no-load condition to a full rated generator output and from power factor 1.0 - 0.8 with engine drive speed variations up to -6%. Prior to starting the engine, turn the VOLT and STAB trimmers (using a mini phillips screw-driver) fully in a counter clockwise (Minimum) direction until you feel them hit their stops. Turn the AMP and HERTZ trimmers completely clockwise (Maximum) in the same manner. With the generator running at no-load, at normal speed, and with VOLT adjust at minimum, it is possible that output voltage will oscillate. Slowly rotate the VOLT adjust clockwise. The voltage output of the alternator will increase and stabilize. Increase the voltage to the desired value. In this situation, only the green LED will stay lit.

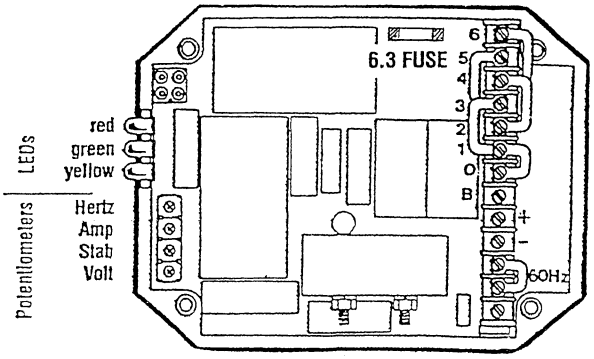

VOLTAGE REGULATOR DIAGRAM

Stability

This potentiometer permits variation of the regulator's response to generator load changes so as to limit overcompensation and obtain a minimum recovery time to the normal voltage output.

In order to adjust the regulator stability the alternator must be running at no-load and the output must be monitored.

Turn the STAB adjust slowly clockwise until the voltage starts to fluctuate. At this point rotate the STAB adjust counterclockwise until the voltage is stable within 1 or 2 tenths of a volt.

Amp-Hertz

These two adjustments are used in conjunction with the two protection circuits in the voltage regulator that are indicated by the illumination of a colored LED lights.

1. Delayed overload protection (yellow LED).
2. Low speed protection (red LED).

Both systems have an intervention threshold which can be adjusted using the respective potentiometer. Each of the two circuits are able to cause an adequate reduction in excitor voltage to safeguard the excitor windings and prevent their overheating.

The overload protection system has a delay which permits temporary overloading of the generator during times such as motor start-up or other similar load surge demands. The regulator also has a third LED (green), that glows during generator operation to indicate correct operation of the regulator with the generator.

GENERATOR AC VOLTAGE CONNECTIONS

AC VOLTAGE CONNECTIONS

NOTE: The frame ground wire (white/green) must be properly positioned when changing the AC output configuration of the AC terminal block. For making connections to the AC terminal block, use terminal ends for 1/4 inch studs that will accept multi strand copper wire sized for the amperage rating from the hot lead connection. The frame ground wire is white or white with a green strip. It connects between the neutral stud and the generator frame.

Generator Frequency

Frequency is a direct result of engine/generator speed: 1800 rpm = 60 hertz; 1500 rmp = 50 hertz.

NOTE: *The white/green ground wire may be removed in those installations where the AC circuit has a separate neutral and ground circuit. This will prevent the unit from being a ground source in the vessel.*

BE SINGLE PHASE

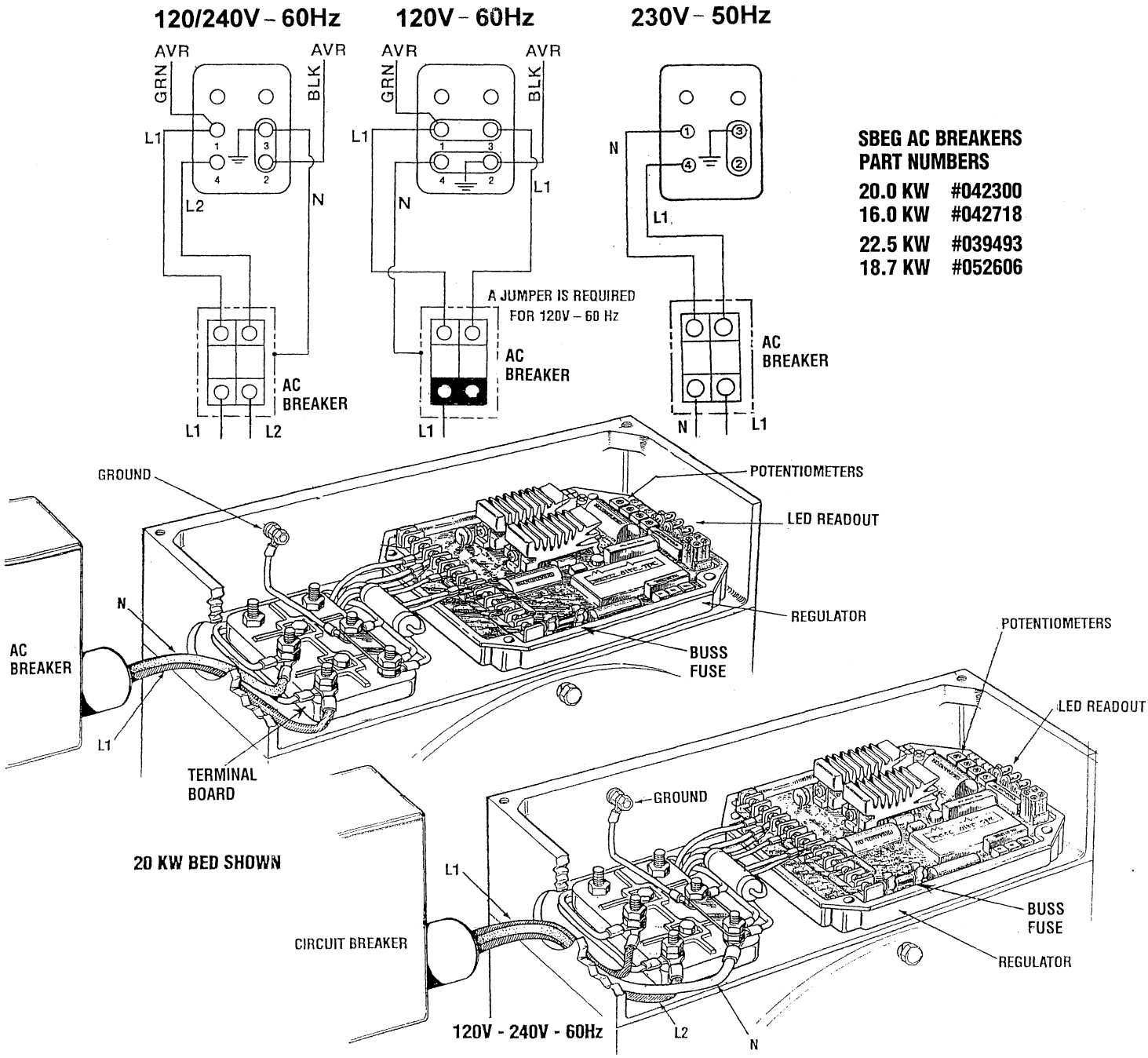

GENERATOR AC VOLTAGE CONNECTIONS

DESCRIPTION

The regulator is equipped with seven numbered terminals (0 to 6) and their related brass jumpers. The illustrations show connection points and jumpers for the 3 phase configuration of the generator. The sensing leads connect between pin #1 and pin #2 on the AC terminal block and connection #2 and #0 on the voltage regulator board.

NOTE: *Series Delta requires the installation of a jumper on the regulator board between terminal B and 10.*

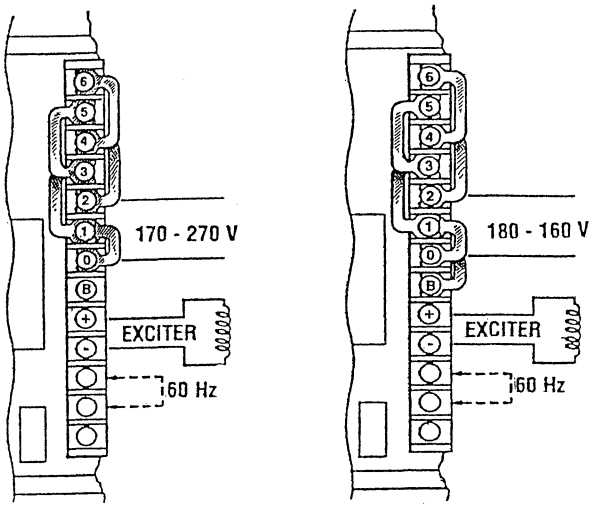

3 PHASE VOLTAGE REGULATOR

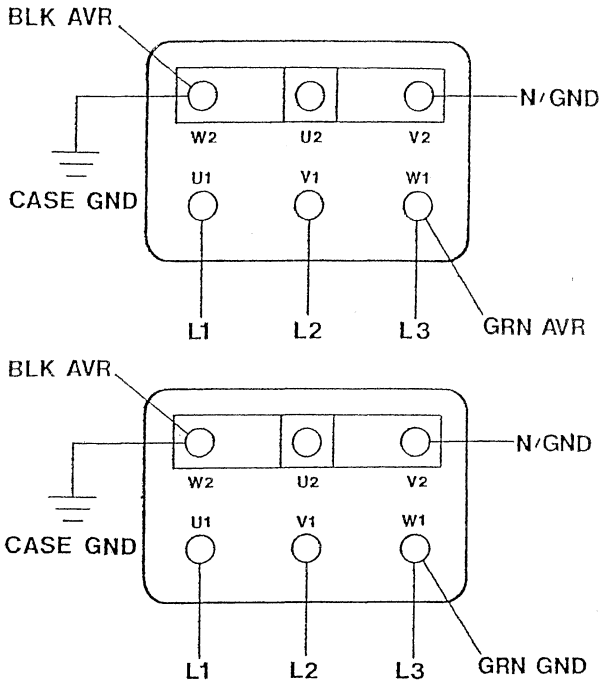

BE THREE PHASE (SIX WIRE)

PARALLEL WYE (STAR)

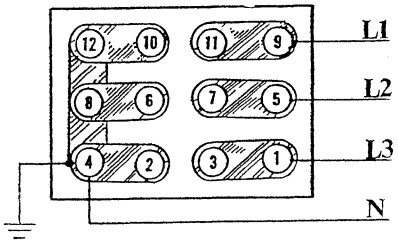

L-N – 120 VAC 1Ø 60 Hz
L-N – 110 VAC 1Ø 60 Hz

SERIES WYE (STAR)

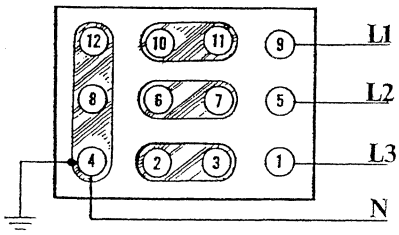

L-L – 450 VAC 3Ø 60 Hz
L-N – 265 VAC 1Ø 60 Hz

SERIES DELTA

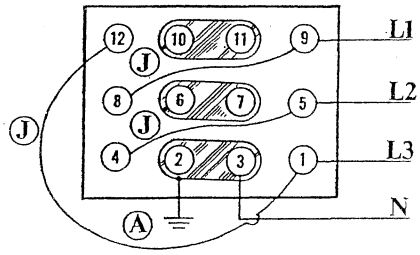

L-L – 240 VAC 3Ø 60 Hz
L2, L3-N – 120 VAC 1Ø 60 Hz

BE THREE PHASE (TWELVE WIRE)

A. SERIES DELTA – Note the repositioning of the ground lead from neutral to generator housing.

J. Jumper using #10 AWG Wire.

GENERATOR AC VOLTAGE CONNECTIONS

BE THREE PHASE 6 STUD / 12 WIRE TERMINAL BLOCKS

NOTE: *For output leads from the AC terminal block used terminal ends for 1/4" studs that accept multi-strand copper wire sized for the average rating from the hot lead connection.*

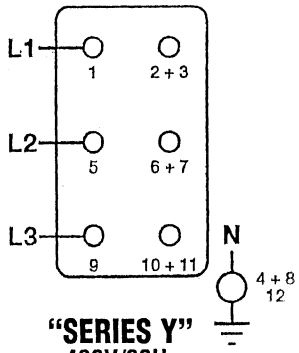

"SERIES Y"
480V/60Hz
380V/50Hz

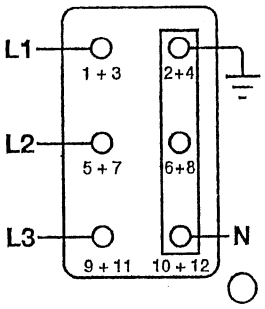

"PARALLEL Y"
208V/60Hz
190V/50Hz

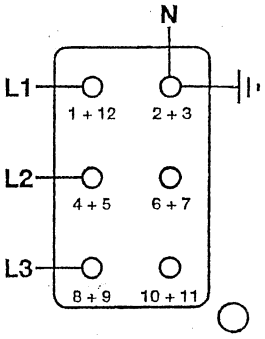

"SERIES DELTA"
240V/60Hz
230V/50Hz

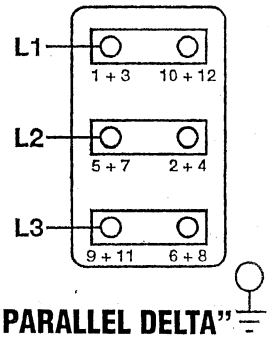

"PARALLEL DELTA"
120V/60Hz
115V/50Hz

"SINGLE PHASE"

"DOUBLE DELTA"
120 - 240V/60Hz
115 - 230V/50Hz
(3 wire split single phase)

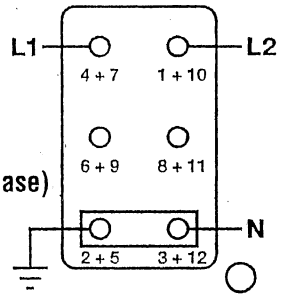

"SINGLE PHASE"

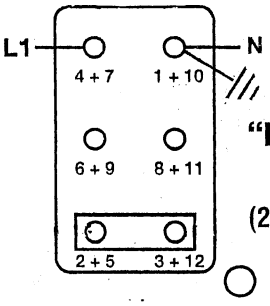

"DOUBLE DELTA"
240V/60Hz
230V/50Hz
(2 wire single phase)

GENERATOR AC VOLTAGE CONNECTIONS BE SINGLE PHASE

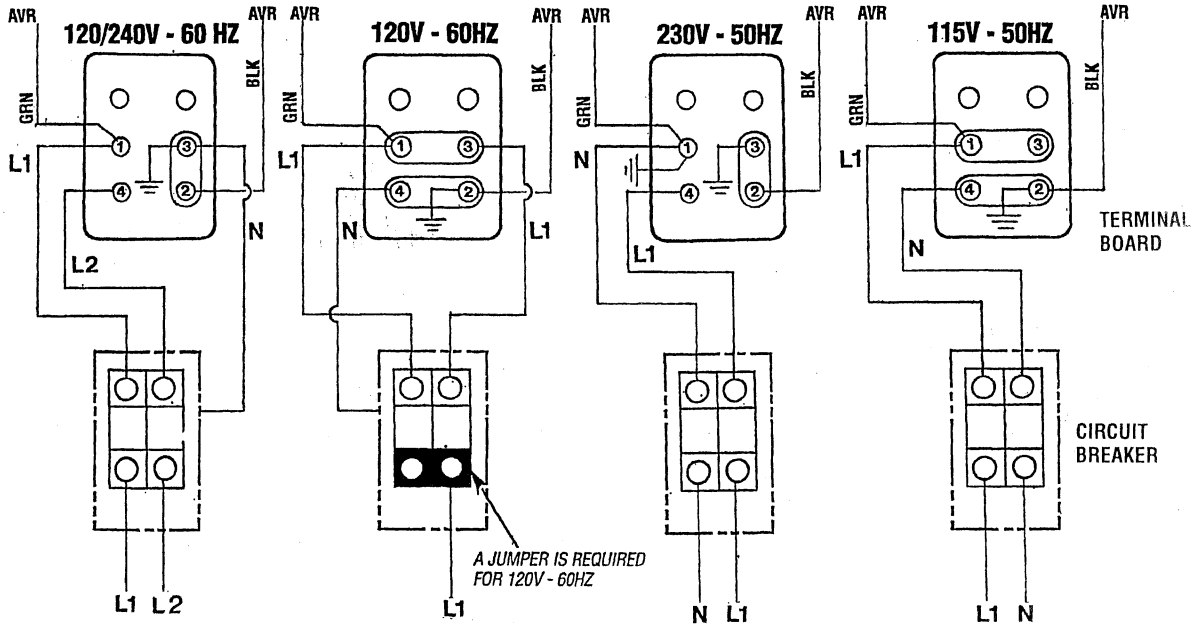

SBEG TROUBLESHOOTING

NOTE: *AC GENERATOR TROUBLESHOOTING MUST BE PERFORMED WITH THE ENGINE OPERATING AT 60 HZ.*

FAULT	PROBABLE CAUSE	
NO AC VOLTAGE OUTPUT AT NO LOAD.	1. Short or open in the main stator winding. 2. Shorted varister on exciter rotor. 3. Four or more shorted or open diodes on exciter rotor.	4. Open in exciter stator winding. 5. Open in rotating field winding.
RESIDUAL VOLTAGE PRODUCED AT NO LOAD 15 - 20 VOLTS AC.	1. Blown 6 AMP fuse auxiliary circuit feed to AVR. 2. Faulty voltage regulator	3. Shorted or open main stator auxiliary winding.
LOW AC VOLTAGE OUTPUT AT NO LOAD 60 - 100 VAC.	1. Reset voltage potentiometer. 2. Open or shorted diodes in exciter rotor 1 to 3 diodes. 3. Faulty voltage regulator	4. Short in rotating field winding. 5. Short in exicter stator.
HIGH AC OUTPUT VOLTAGE 150 VAC OR HIGHER.	1. Faulty voltage regulator.	
UNSTABLE VOLTAGE OUTPUT.	1. STB pod on regulator needs adjustment.	2. Faulty voltage regulator.
AC VOLTAGE DROP UNDER LOAD 60 - 100 VOLTS AC.	1. Diode(s) on exciter rotor breaking down when load is applied (inductive) 1-3 diodes.	

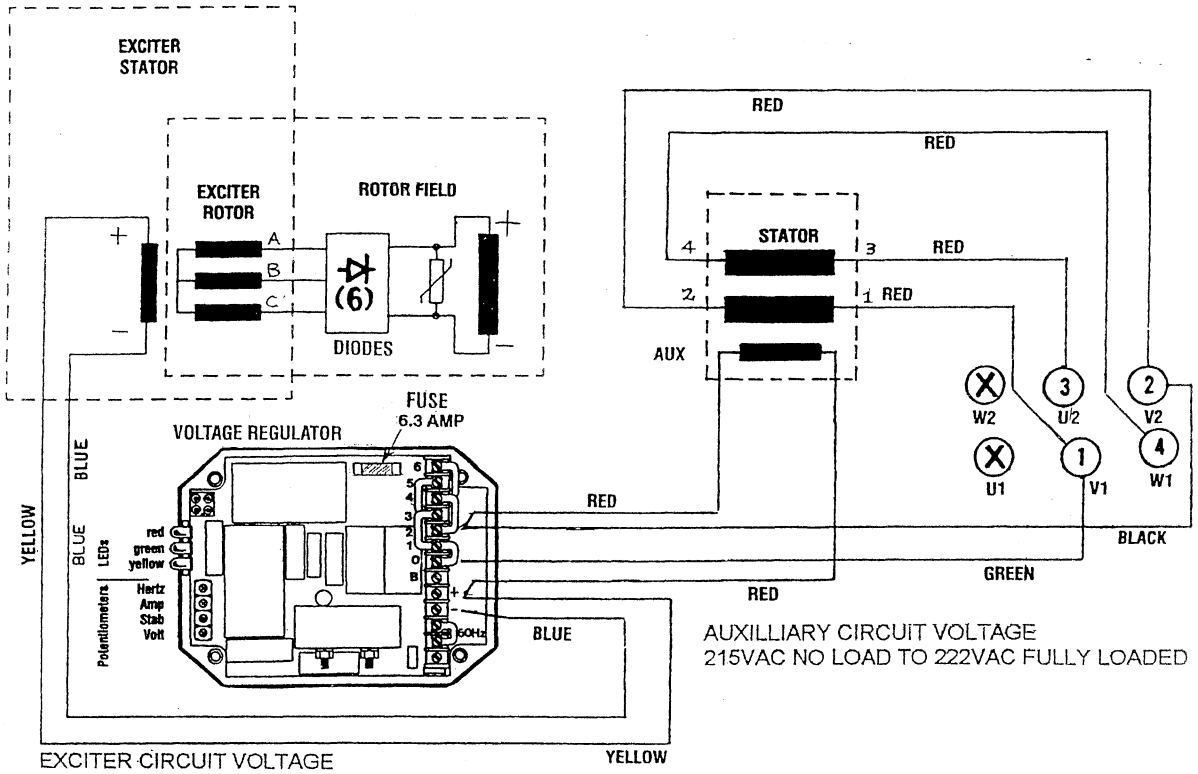

AUXILLIARY CIRCUIT VOLTAGE
215VAC NO LOAD TO 222VAC FULLY LOADED

EXCITER CIRCUIT VOLTAGE
8.0VDC NO LOAD TO 17.0VDC FULLY LOADED

INTERNAL WIRING SCHEMATICS

SINGLE PHASE

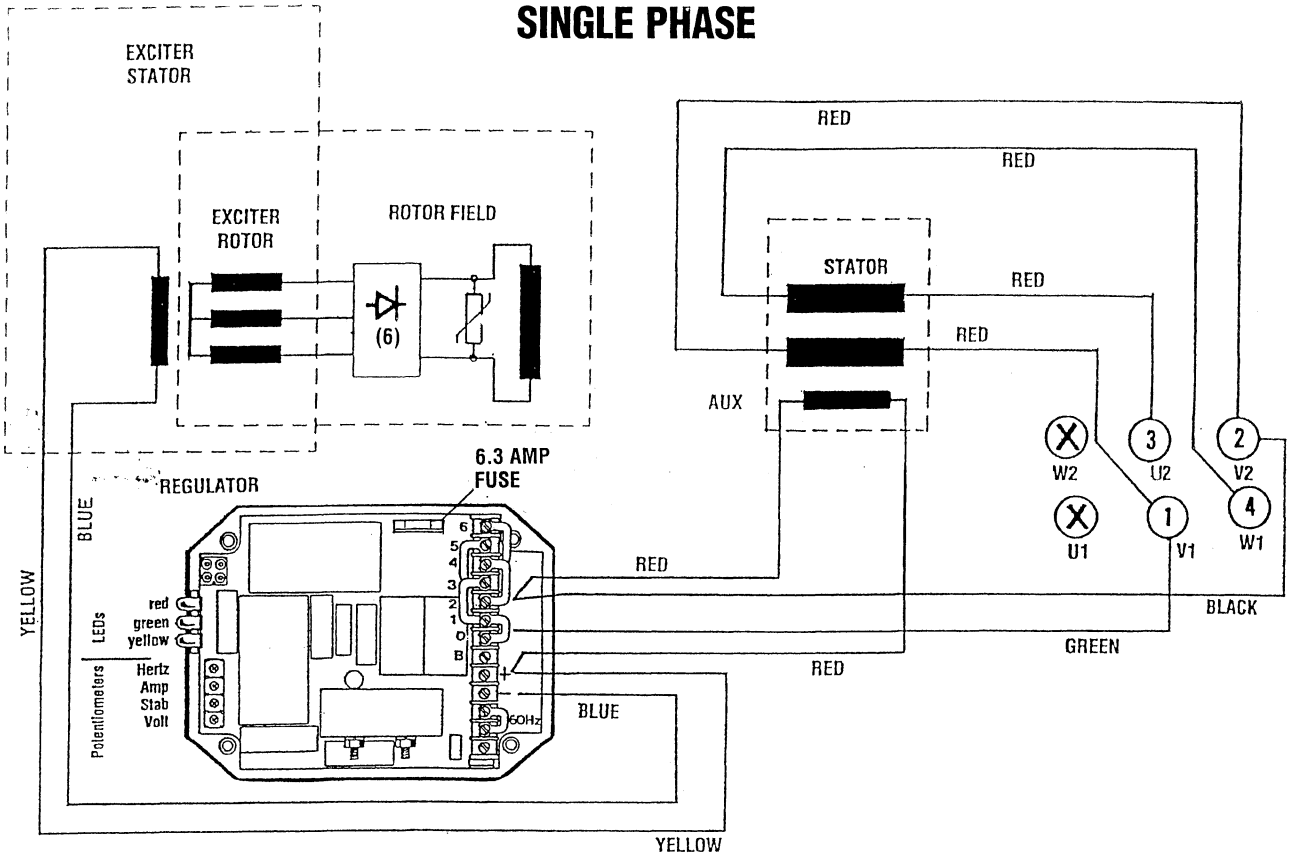

THREE PHASE

6 WIRE RECONNECTABLE

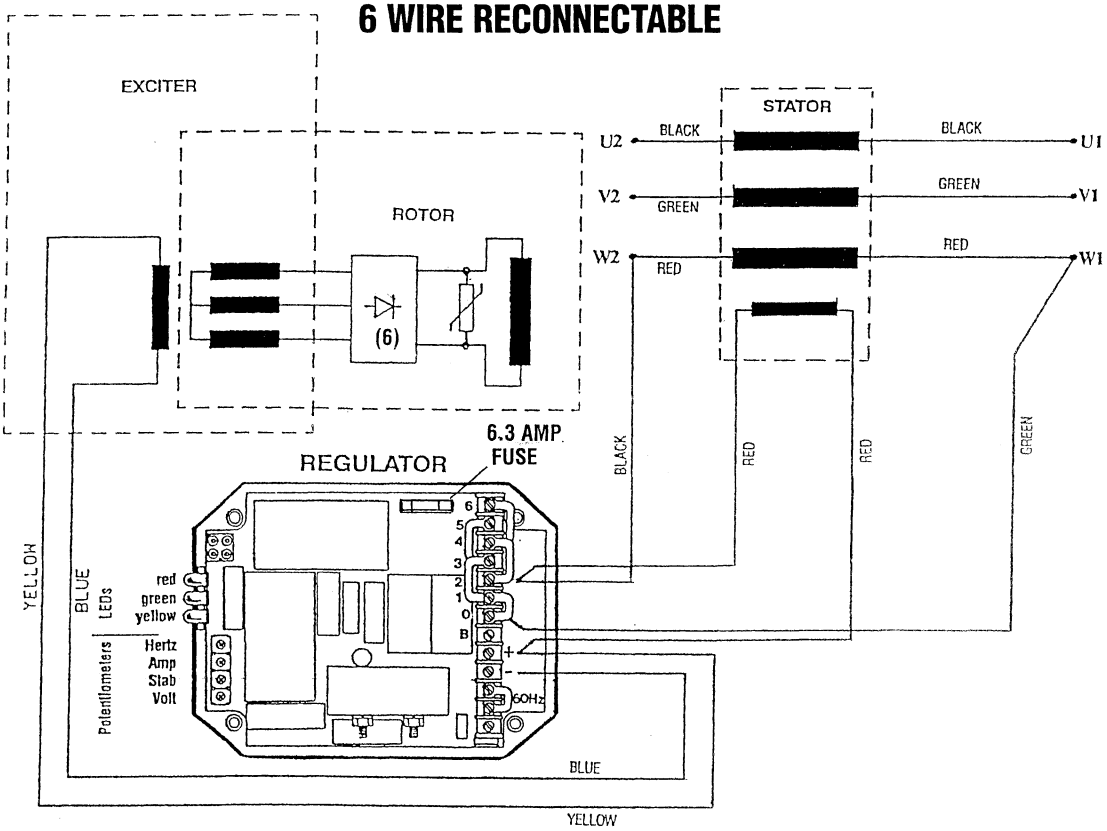

SHORE POWER TRANSFER SWITCH

SINGLE LINE 120 VOLT SYSTEM

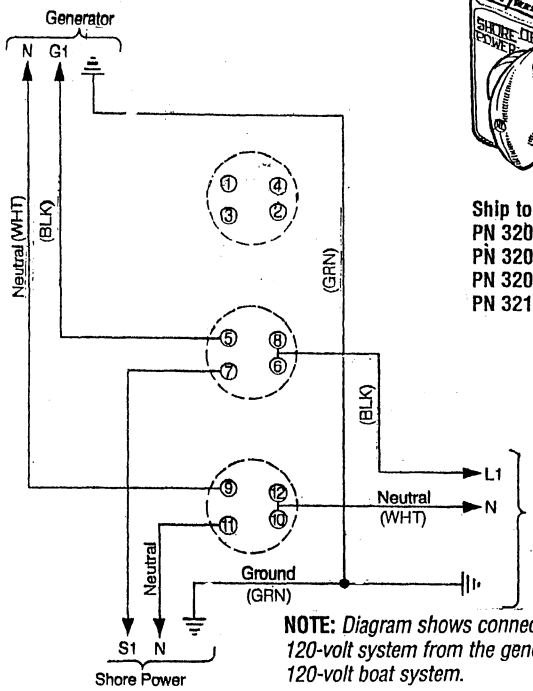

NOTE: *Diagram shows connections for a two wire, 120-volt system from the generator with three wire, 120-volt boat system.*

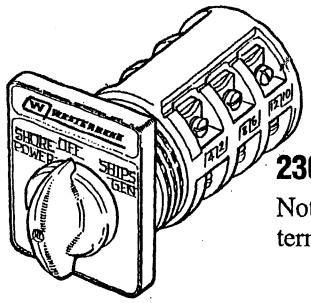

Ship to Shore Switch (3 Pole)
PN 32008 40 Amps/Pole
PN 32009 80 Amps/Pole
PN 32010 125 Amps/Pole
PN 32133 200 Amps/Pole

NOTE: *Ship to shore switches are available at your WESTERBEKE dealer.*

230 VOLT/50 HERTZ TWO WIRE CONFIGURATION

Notice the repositioning of the white wire ground load on the terminal block to the generator case.

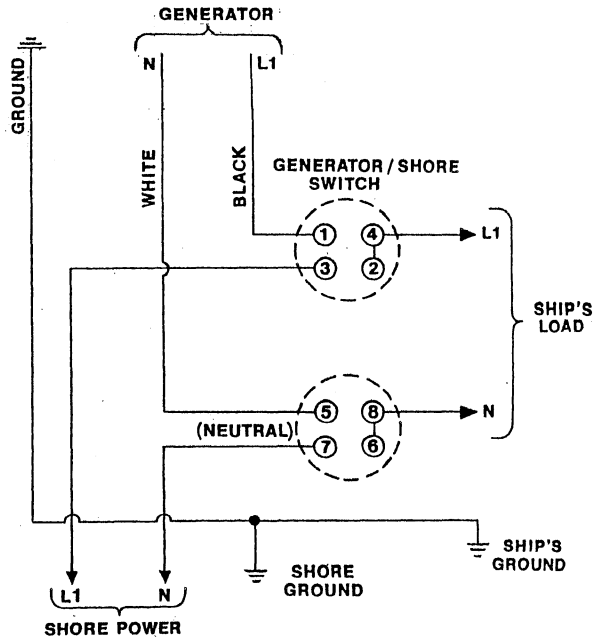

If the installer connects shore power to the vessel's AC circuit, this must be done by means of the Shore Power Transfer Switch. Set the transfer switch shown in the diagrams to the OFF position. This switch prevents simultaneous connection of shore power to generator output.

Switching Shore Power to Generator Power

⚠ CAUTION: ***Heavy motor leads should be shut off before switching shore power to generator power or vice-versa because voltage surges induced by switching with heavy AC loads on the vessel being operated may cause damage to the exciter circuit components in the generator.***

⚠ CAUTION: ***Damage to the generator can result if utility shore power and generator output are connected at the same time. This type of generator damage is not covered under the warranty; it is the installer's responsibility to make sure all AC connections are correct.***

NOTE: This diagram shows connections for a two wire, 120V system from the generator with a three wire -120V boat system.

120 VOLT/60 HZ THREE WIRE CONFIGURATION

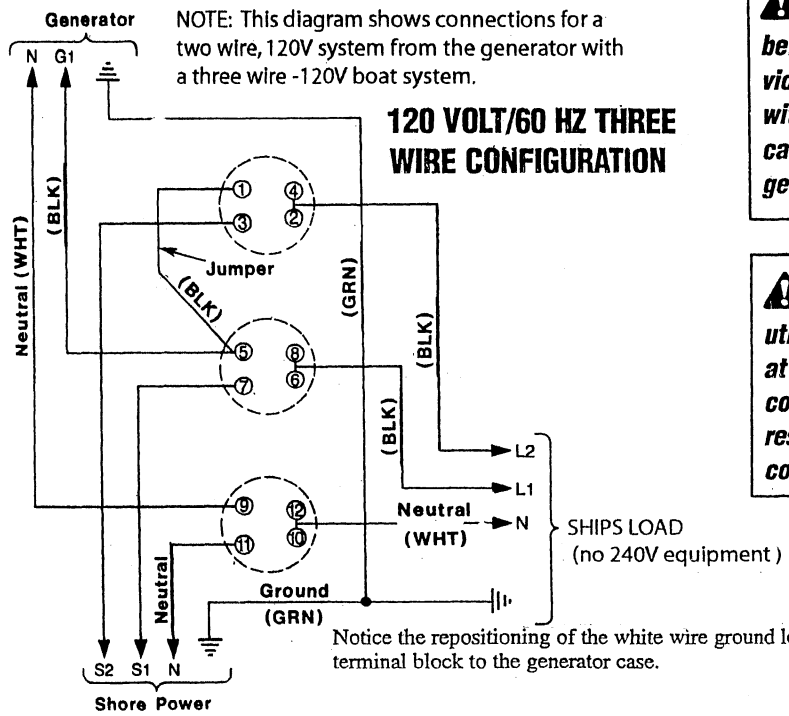

Notice the repositioning of the white wire ground load on the terminal block to the generator case.

WESTERBEKE 20.0KW TO 22.5KW SBEG ENGINE SPECIFICATIONS

ENGINE SPECIFICATIONS

Engine Type	Gasoline, four-cycle, four-cylinder, fresh water-cooled, Vertical, in-line overhead mechanism
Governor	1.0% speed regulation
Combustion Chamber	Multi-sphere type
Bore & Stroke	3.38 x 3.70 inches (86.0 x 94.0 mm).
Piston Displacement	133.26 cubic inches (2184 cubic centimeters)
Firing Order	1 - 3 - 4 - 2
Direction of Rotation	Clockwise, when viewed from the front
Compression Ratio	8.6:1
Inclination	Continuous 26° Temporary 30°
Horsepower Outlet	35hp at 1800rpm 28hp at 1500rpm
Weight	**20.0Kw** 741 lbs (336 kgs) **22,5Kw** 771 lbs (349 kgs) *(These engine weights are approximate)*
Fuel Consumption (at full amperage load approximate gph (lph)	**20.0Kw** 2.0 gph **16.0Kw** 6.3 lph **22.5.Kw** 2.2 gph **18.7Kw** 7.0 lph

TUNE-UP SPECIFICATIONS

Compression Pressure (Limit of difference between cylinders)	198.1 psi (14 kg/cm²) at 400 rpm
Valve Timing	Intake Opens 2° BTDC Intake Closes 53° ABDC Exhaust Opens 57° BBDC Exhaust Closes -2° ATDC
Valve Seat Angle	Intake 45° Exhaust 45°
Valve Clearance (engine warm)	Intake 0.012 inches (0.3 mm) Exhaust 0.012 inches (0.3 mm)
Prark Plug Gap	0.028 - 0.033 in (0.7 - 0.8 mm)
Engine Timing	33° BTDC at 1800 rpm + or -1° (vacuum advance connected)

EXHAUST EMISSIONS SYSTEMS

Emission Control Systems	EPA Title 40, part 1048 Carb Title 13, chapter 9, article 4.5

IGNITION SYSTEM

General	Battery ignition 12V negative ground. Distributor with ignition module and igniter. Ignition coil and spark plug.
Distributor	Solid state type with signal generator and ignitor.
Timing	33° BTDC at 1800 rpm + or -1° (vacuum advance connected)
Throttle Body	Electronic fuel injection with Electronic Governor
Dwell	63° at 1800 rpm

FUEL SYSTEM

General	Electronic fuel injection
Fuel	Unleaded gasoline with an octane rating of 89 or higher. Loss of power may result from a lower Octane use. Ethanol blend no higher than 10% (E10)
Fuel Lift Pump (wet)	Electric-lift capacity of 6ft (18mm)
Fuel Filter (on engine)	Replaceable cartridge-screw on
Air Cleaner (flame arrester)	Metal screen type - cleanable
Air Flow (engine combustion)	69.5 cfm (1.9 cmm)

COOLING SYSTEM

General	Fresh water-cooled block, thermostatically-controlled with heat exchanger.
Operating Temperature	170 - 190° F (77 - 88° C)
Fresh Water Pump	Centrifugal type, metal impeller, belt-driven
Raw Water Pump	Positive displacement, rubber impeller, belt driven
Raw Water Flow, at 1800 rpm	6.7 gpm (25.3 lpm)
System Capacity (coolant)	9.0 qts (8.5 liters)

WESTERBEKE 20.0KW TO 22.5KW SBEG ENGINE SPECIFICATIONS

LUBRICATION SYSTEM

General	Pressure fed system
Oil Filter	Full flow, paper element. spin-on type
Sump Capacity (Not including filter)	4.0 qts. (3.7 liters) (plus filter)
Operating Oil Pressure (Engine hot)	55 - 75 psi (3.8 - 5.2 kg/cm^2)
Oil Grade	API Specification of SJ, SL or SM SAE 15W-40 or 10W-40

ELECTRICAL SYSTEM

Start Battery	12-Volt, (-) negative ground Battery must be totally dedicated to the generator and maintained by the generators own engine DC charging alternator
Battery Capacity	800 - 1000 Cold Cranking Amps rated (CCA)
Starter	12 Volt, (-) negative ground
DC Charging	12 VDC belt driven alternator
DC Charging Cranking Amps	175 - 200 amps

GENERATOR COOLING

Air Requirements (60 Hertz @ 1800 rpm)	450 cfm (12.74 cmm)
Engine Combustion Air Requirements (60 Hertz @ 1800 rpm)	69.5 cfm (1.9 cmm)
Engine Cooling Air	200-250 cfm
Generator Cooling Air Requirements	250 - 300 cfm (60 Hertz @ 1800 rpm)

NOTE: *Increase air supply 15% for 50 Hertz operation (1500 rpm)*

Generator Compartment Ambient Temperature	122° F (50° C max)

NOTE: *Provide forced air ventilation to keep compartment ambient temperature below maximum under all conditions.*

AC GENERATOR (Single Phase)

General - Single Phase	Brushless, four-pole, revolving field. Sealed lubricated single bearing design. Reconnectable single phase for 120/240 volts with solid state voltage regulator.	
Voltage - Single Phase	120 or 120/240 Volts - 60 Hertz 220 Volts - 50 Hertz.	
Voltage Regulation	±2% no load to full load.	
Frequency Regulation	1.0% no load to full load.	
Rating (Volts AC)		
20.0KW - 60 Hz	120 volts 120/240 volts	166 amps 166/83 amps
16.0KW - 50 Hz	230 volts	69 amps
22.5.KW - 60 Hz	120 volts 120/240 volts	187 amps 187/93 amps
18.7KW - 50 Hz	230 volts	78 amps

AC GENERATOR (3 Phase)

General - 3 Phase	Brushless, six-pole, revolving field. Sealed lubricated single bearing design. 12 lead reconnectable for low voltage WYE and for Delta. Solid state voltage regulator with protection circuitry	
Voltage - 3 phase (60 Hertz)	Low Voltage WYE High Voltage WYE DELTA	208 Volts 480 Volts 240 Volts
Voltage - 3 Phase (50 Hertz)	Low Voltage WYE High Voltage WYE DELTA	200 Volts 400 Volts 230 Volts
20.0KW - 60 Hz Amperage - 3 phase	Low Voltage WYE High Voltage WYE DELTA	70 Amps 35 Amps 60 Amps
16.0KW - 50 Hz Amperage - 3 phase	Low Voltage WYE High Voltage WYE DELTA	27.8 Amps 28.9 Amps 50.2 Amps
22.5.KW - 60 Hz Amperage - 3 phase	Low Voltage WYE High Voltage WYE DELTA	86.7 Amps 37.6 Amps 75.2 Amps
18.7KW - 50 Hz Amperage - 3 phase	Low Voltage WYE High Voltage WYE DELTA	67.5 Amps 33.7 Amps 58.7 Amps

LAY-UP & RECOMMISSIONING

GENERAL

Many owners rely on their boatyards to prepare their craft, including engines and generators, for lay-up during the off-season or for long periods of inactivity. Others prefer to accomplish lay-up preparation themselves.

The procedures which follow will allow you to perform your own lay-up and recommissioning, or you may use them as a check list if others do the procedures.

These procedures should afford your engine protection during a lay-up and also help familiarize you with the maintenance needs of your engine.

If you have any questions regarding lay-up procedures, call your local servicing dealer; he will be more than willing to provide assistance.

LUBRICATION SYSTEM

With the engine warm, drain all the lubricating oil from the oil sump. Remove and replace the oil filter and fill the sump with new oil. Use the correct grade of oil. Refer to the *ENGINE LUBRICATING OIL* pages in this manual for the oil changing procedure. Run the engine and check for proper oil pressure and make sure there are no leaks.

> ⚠ **CAUTION:** ***Do not leave the engine's old engine oil in the sump over the lay-up period. Lubricating oil and combustion deposits combine to produce harmful chemicals which can reduce the life of your engine's internal parts.***

INTAKE MANIFOLD

Clean the filter screen in the flame arrester, and place a clean cloth lightly soaked in lube oil around the flame arrester to block any opening. Also place an oil-soaked cloth in the through-hull exhaust port, Make a note to remove cloths prior to start-up!

Cylinder Lubrication

After engine shutdown, remove the spark plugs and spray a small amount of fogging oil into each cylinder. Rotate the crankshaft manually two complete revolutions. Re-install the spark plugs loosely for winter lay-up.

NOTE: *At Spring commissioning, remove the spark plugs and rotate the crankshaft two complete revolutions. Re-install the spark plugs, tighten properly and connect the high tension leads fully onto each spark plug.*

FUEL SYSTEM

Top off your fuel tanks with *unleaded* gasoline of 89 octane or higher. A fuel conditioner such as Marine Sta-Bil gasoline stabilizer should be added. Change the element in your gasoline/water separator and clean the metal bowl. Re-install and make certain there are no leaks. Clean up any spilled fuel.

STARTER MOTOR

Lubrication and cleaning of the starter drive pinion is advisable, the pinion is accessible when the flywheel cover is removed. Make sure the battery connections are shut off before attempting to remove the starter. Take care in properly replacing any electrical connections removed from the starter.

Raw Water Cooling Circuit

Close the through-hull seacock. Remove the raw water intake hose from the seacock. Place the end of this hose into a five gallon bucket of clean fresh water. Before starting the engine, check the zinc anode found in the primary heat exchanger on the engine and clean or replace it as required, and also clean any zinc debris from inside the heat exchanger where the zinc anode is located. Clean the raw water strainer.

Start the engine and allow the raw water pump to draw the fresh water through the system. When the bucket is empty, stop the engine and refill the bucket with an antifreeze solution slightly stronger than needed for winter freeze protection in your area.

Start the engine and allow all of this mixture to be drawn through the raw water system. Once the bucket is empty, stop the engine. This antifreeze mixture should protect the raw water circuit from freezing during the winter lay-up, as well as providing corrosion protection.

Remove the impeller from your raw water pump (some antifreeze mixture will accompany it, so catch it in a bucket). Examine the impeller. Acquire a replacement, if needed, and a cover gasket. Do not replace the impeller (into the pump) until recommissioning, but replace the cover and gasket.

BATTERIES

If batteries are to be left on board during the lay-up period, make sure that they are fully charged, and will remain that way, to prevent them from freezing. If there is any doubt that the batteries will not remain fully charged, or that they will be subjected to severe environmental conditions, remove the batteries and store them in a warmer, more compatible environment.

> ⚠ **WARNING:** ***Lead acid batteries emit hydrogen, a highly-explosive gas, which can be ignited by electrical arcing or a lighted cigarette, cigar, or pipe. Do not smoke or allow an open flame near the battery being serviced. Shut off all electrical equipment in the vicinity to prevent electrical arcing during servicing.***

GASOLINE

> ⚠ **CAUTION:** ***use unleaded 89 Octane gasoline or higher. Ethanol gasoline must not exceed E10 (10%). Gasoline with higher percentages of Ethanol are not acceptable for use in these models and can void the warranty.***

LAY-UP & RECOMMISSIONING

SPARE PARTS

Lay-up time provides a good opportunity to inspect your Westerbeke engine to see if external items such as drive belts or coolant hoses need replacement. Check your basic spares kit and order items not on hand, or replace those items used during the lay-up, such as filters and zinc anodes. Refer to the *SPARE PARTS* section of this manual.

RECOMMISSIONING

The recommissioning of your Westerbeke engine after a seasonal lay-up generally follows the same procedures as those described in the *PREPARATIONS FOR STARTING* section regarding preparation for starting and normal starts. However, some of the lay-up procedures will need to be counteracted before starting the engine.

1. Remove the oil-soaked cloths from the intake manifold.
2. Remove the raw water pump cover and gasket and discard the old gasket. Install the raw water pump impeller removed during lay-up)or a replacement, if required). Install the raw water pump cover with a new cover gasket.
3. Re-install the batteries that were removed during the lay-up and re-connect the vattery cables, making sure the terminals are clean and that the connections are tight. Check to make sure that the batteries are fully charged.
4. Remove the spark plugs, wipe clean, re-gap and install to proper tightness (gasoline).
5. Start the engine in accordance with the procedures described in the *PREPARATIONS FOR STARTING* section of this manual.

MEASURING EXHAUST BACK PRESSURE

Exhaust systems normally produce resistance to the flow of exhaust gases, causing back-pressure. Back-pressure must be kept within a certain limit. **Check the back-pressure before the generator is put back into service.**

To test exhaust pressure, connect either a water column or PSI tube to the test part on the exhaust elbow as shown.

Check the exhaust back-pressure before the generator is put into service. Measure the back-pressure after the engine has reached its normal operating temperature, and at the point where it is about to reach its rated load at either 1500 rpm (for 50Hz applications) of 1800 rpm (for 60 Hz applications). Back-pressure should not exceed 1.5 psi)o.11 kg/cm^2).

NOTE: *High exhaust system back-pressure will affect the operation of the Low CO system.*

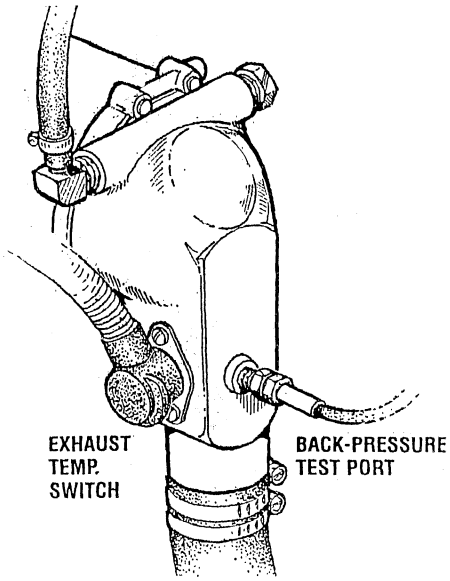

OXYGEN SENSORS

There are two oxygen sensors, one at the location on the exhaust manifold where the engine exhaust enters the catalyst and the other where the exhaust gas exits the catalyst. These signal the ECU regarding CO levels entering the catalyst and leaving it.

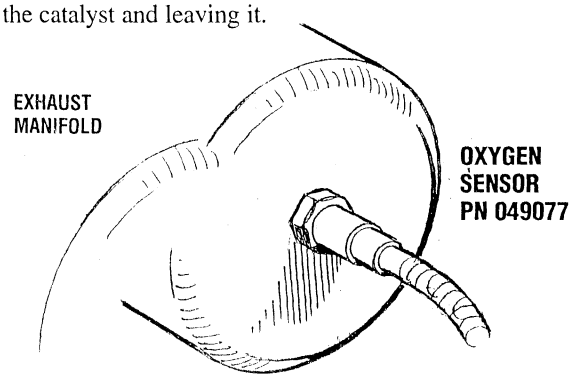

EXHAUST SYSTEM MAINTENANCE

DESCRIPTION

The catalyst is critical to minimizing exhaust emissions like CO. Any water intrusion into the engine's exhaust system will likely quickly compromise the proper operation of the catalyst.

Westerbeke's exhaust system installation instructions dated July 2013 must be adhered to.

NOTE: *Water intrusion is not a product defect and is not covered under warranty, neither Westerbeke's normal product warranty nor the emissions specific warranty mandated by various regulating authorities such as EPA and CARB.*

INSPECTION

Maintenance of any components affecting the flow of air into the engine or the flow of fuel to the engine is critically important. Fuel filters, air filters, flame arrester screens MUST be properly maintained.

Inspection of the catalyst at the prescribed intervals is critically important. The exhaust elbow is removed by loosening the metal clamp to provide a view of the output surface of the catalyst. Any visual irregularity of the normal flush, honeycomb appearance is most likely a result of water intrusion. The cause of the irregularity must be identified and addressed. If there is irregularity, the catalyst and sealing gasket must be replaced. The water injected exhaust elbow casting must be inspected also for corrosion and replaced as needed. Upon careful reassembly of the catalyst, new sealing gasket, and exhaust elbow, check for the presence of CO while the engine is running. This must be performed with a CO analyzer.

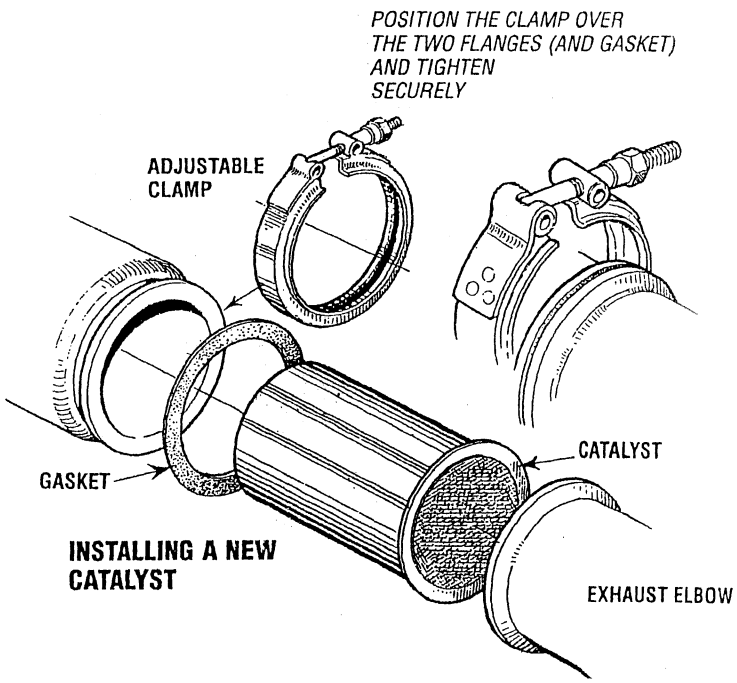

NOTE: *The exhaust temperature switch should always be attached to the upper most mounting of the two available on the elbow.*

OPTIONAL REMOTE OIL FILTER (PN. 032149)

INSTALLATION

This popular accessory is used to relocate the engine's oil filter from the engine to a more convenient location such as an engine room bulkhead.

NOTE: *Refer to ENGINE OIL CHANGE in this manual for instructions on removing the oil filter.*

To install, simply remove the engine oil filter and thread on WESTERBEKE's remote oil filter kit as shown. Always install this kit with the oil filter facing down as illustrated.

Contact your WESTERBEKE dealer for more information.

NOTE: *Westerbeke is not responsible for engine failure due to incorrect installation of the Remote Oil Filter.*

⚠ CAUTION: ***It is vital to install the oil lines correctly. If the oil flows in the reverse direction, the bypass valve in the filter assembly will prevent the oil from reaching the engine causing an internal engine failure. If there is no oil pressure reading, shutdown immediately and check the hose connections.***

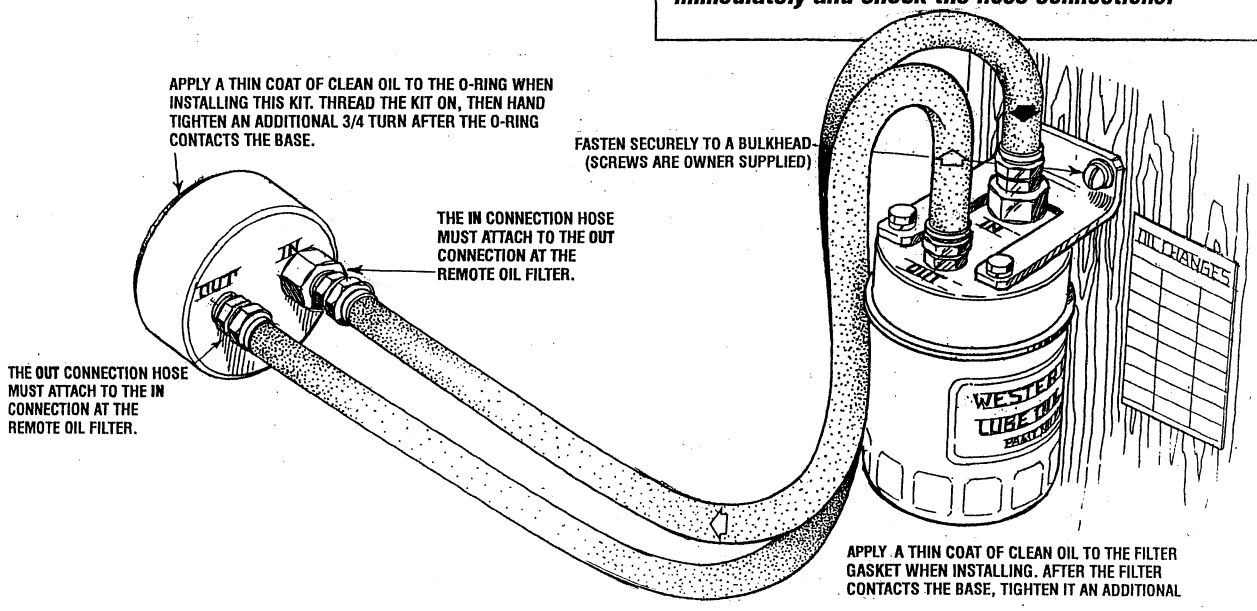

TORQUE SPECIFICATIONS - 20KW AND 22.5KW SBEG GENERATORS

COMPONENT	FT-LB (M-KG)
Air Cleaner Bracket	12.7 - 17.4 (1.9 - 2.6)
Alternator bracket	25.5 - 35.6 (3.8 - 5.3)
Alternator Flange Bolt	12.7 - 20.8 (1.9 - 3.1)
Alternator Strap	12.7 - 17.4 (1.9 - 2.6)
Camshaft Pully Lock Bolt	32.2 - 44.3 (4.8 - 6.6)
Throttle Body	8.0 - 11.4 (1.2 - 1.7)
Connecting Rod Cap	44.3 - 47.0 (6.6 - 7.0)
Coolant Pump	12 - 17 (1.6 - 2.4)
Coolant Pump Pulley	12 -17 (1.6 - 2.4)
Coolant Temperature Sendor	9 - 13 (1.2 - 1.8)
Crank Shaft Pulley	22.1 - 25.5 (3.3 - 3.8)
Cylinder Head	
Cold	51--55 (8.2 - 8.8)
Cylinder Head Cover	2.6 - 4.0 (4.0 - 6.0)
Drive Plate	16.1 - 18.1 (2.4 - 2.7)
Exhaust Manifold	12 - 17 (1.6 - 2.4)
Front Housing Assembly	12.7 - 17.4 (1.9 - 2.6)
Intake Manifold	12 - 17 (1.6 - 2.4)

COMPONENT	FT-LB (M-KG)
Main Bearing Cap	56.4 - 60.4 (8.4 - 9.0)
Oil Pan	4.7 - 8.0 (7.0 - 12.0)
Oil Pressure Sender	9 - 13 (1.2 - 1.8)
Oil Pump	
M6	12.7 - 17.4 (1.9 - 2.6)
M8	25.5 - 35.6 (3.8 - 5.3)
Oil Strainer	
M6	5.3 - 8.0 (8.0 - 12.0)
M8	10.7 - 15.4 (1.6 - 2.3)
Rear Cover Assembly	5.3 - 8.0 (8.0 - 12.0)
Rocker Shaft Assembly	12.0 - 18.1 (1.8 - 2.7)
Spark Plug	10.0 - 15.4 (1.5 - 2.3)
Timing Belt Crank Pulley Bolt	120.9 - 134.4 018.0 - 20.0)
Timing Belt Cover	
Upper	4.7 - 6.7 (7.0 - 10.0)
Lower	4.7 - 6.7 (7.0 - 10.0)
Timing Tension Lock Bolt	25.5 - 35.6 (3.8 - 5.3)
Thermostat Cover	12.7 - 20.8 (1.9 - 3.1)
Water Pump	12.7 - 17.4 91.9 - 2.6)

NOTE: *Formula to convert ft-lbs to Nm (Newton Meters) multiply ft-lb x 1.356*

STANDARD AND METRIC CONVERSION DATA

LENGTH-DISTANCE

Inches (in) x 25.4 = Millimeters (mm) x .0394 = Inches
Feet (ft) x .305 = Meters (m) x 3.281 = Feet
Miles x 1.609 = Kilometers (km) x .0621 = Miles

DISTANCE EQUIVALENTS

1 Degree of Latitude = 60 Nm = 111.120 km
1 Minute of Latitude = 1 Nm = 1.862 km

VOLUME

Cubic Inches (in^3) x 16.387 = Cubic Centimeters x .061 =in^3
Imperial Pints (IMP pt) x .568 = Liters (L) x 1.76 = IMP pt
Imperial Quarts (IMP qt) x 1.137 = Liters (L) x.88 = IMP qt
Imperial Gallons (IMP gal) x 4.546 = Liters (L) x .22 = IMP gal
Imperial Quarts (IMP qt) x 1.201 = US Quarts (US qt) x .833 = IMP qt
Imperial Gallons (IMP gal) x 1.201 = US Gallons (US gal) x .833 = IMP gal
Fluid Ounces x 29.573 = Milliliters x .034 = Ounces
US Pints (US pt) x .473 = Liters(L) x 2.113 = Pints
US Quarts (US qt) x .946 = Liters (L) x 1.057 = Quarts
US Gallons (US gal) x 3.785 = Liters (L) x .264 = Gallons

MASS-WEIGHT

Ounces (oz) x 28.35 = Grams (g) x .035 = Ounces
Pounds (lb) x .454 = Kilograms (kg) x 2.205 = Pounds

PRESSURE

Pounds Per Sq In (psi) x 6.895 = Kilopascals (kPa) x .145 = psi
Inches of Mercury (Hg) x .4912 = psi x 2.036 = Hg
Inches of Mercury (Hg) x 3.377 = Kilopascals (kPa) x .2961 = Hg
Inches of Water (H_2O) x .07355 = Inches of Mercury x 13.783 = H_2O
Inches of Water (H_2O) x .03613 = psi x 27.684 = H_2O
Inches of Water (H_2O) x .248 = Kilopascals (kPa) x 4.026 = H_2O

TORQUE

Pounds-Force Inches (in-lb) x .113 = Newton Meters (Nm) x 8.85 =in-lb
Pounds-Force Feet (ft-lb) x 1.356 = Newton Meters (Nm) x .738 = ft-lb

VELOCITY

Miles Per Hour (MPH) x 1.609 = Kilometers Per Hour (KPH) x .621 = MPH

POWER

Horsepower (Hp) x .745 = Kilowatts (Kw) x 1.34 = MPH

FUEL CONSUMPTION

Miles Per Hour IMP (MPG) x .354 = Kilometers Per Liter (Km/L)
Kilometers Per Liter (Km/L) x 2.352 = IMP MPG
Miles Per Gallons US (MPG) x .425 = Kilometers Per Liter (Km/L)
Kilometers Per Liter (Km/L) x 2.352 = US MPG

TEMPERATURE

Degree Fahrenheit (°F) = (°C X 1.8) + 32
Degree Celsius (°C) = (°F - 32) x .56

LIQUID WEIGHTS

Diesel Oil = 1 US gallon = 7.13 lbs
Fresh Water = 1 US gallon = 8.33 lbs
Gasoline = 1 US gallon = 6.1 lbs
Salt Water = 1 US gallon = 8.56 lbs

SUGGESTED SPARE PARTS

WESTERBEKE MARINE GENERATORS

CONTACT YOUR WESTERBEKE DEALER FOR SUGGESTIONS AND ADDITIONAL INFORMATION

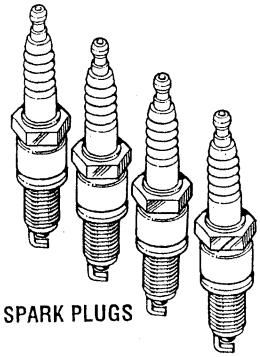

SPARK PLUGS

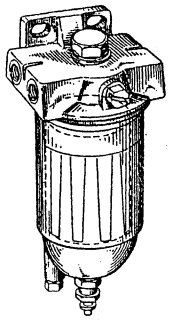

FUEL/WATER SEPARATOR FILTER ELEMENT

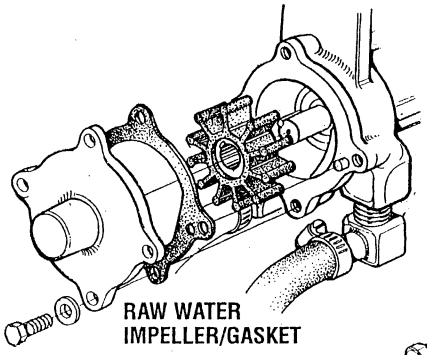

RAW WATER IMPELLER/GASKET

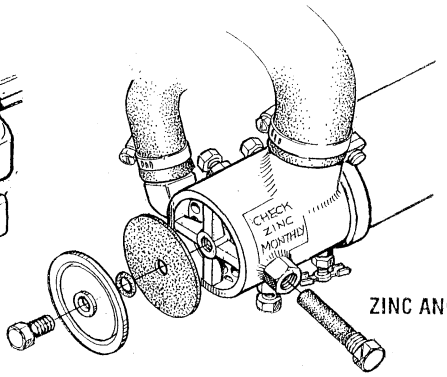

ZINC ANODES

HEAT EXCHANGER END GASKET

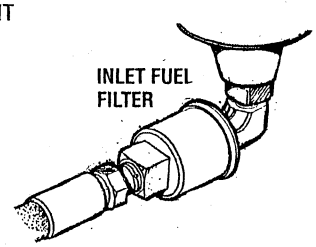

INLET FUEL FILTER

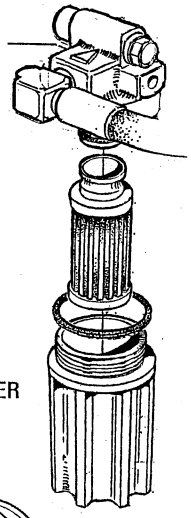

FUEL FILTER

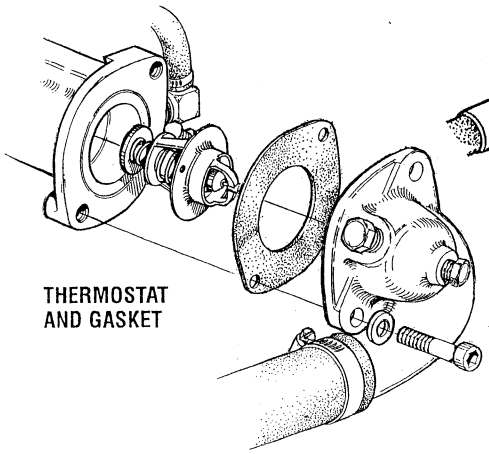

THERMOSTAT AND GASKET

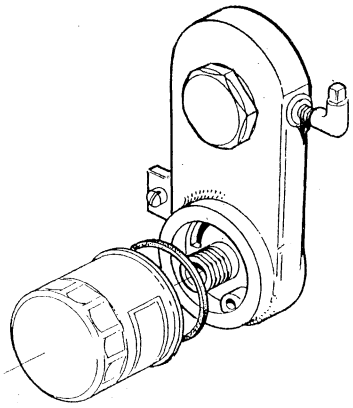

OIL FILTER

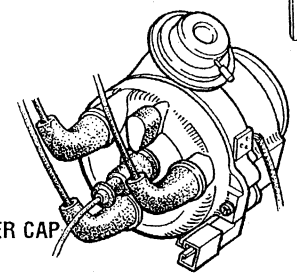

DISTRIBUTER CAP AND WIRES

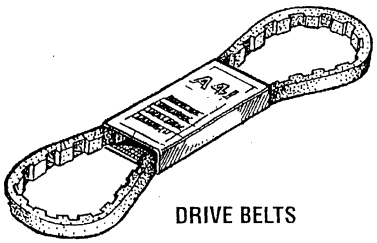

DRIVE BELTS

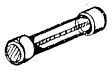

SPARE FUSES

CONTROL PANEL AND BE REGULATOR

WESTERBEKE RECOMMENDS CARRYING ENOUGH SPARE ENGINE OIL (YOUR BRAND) FOR AN OIL CHANGE (5 QTS.) AND A GALLON OF PREMIXED COOLANT.

SPARE PARTS KITS

WESTERBEKE also offers two Spare Parts Kits, each packaged in a rugged hinged toolbox.
Kit **A** includes the basic spares.
Kit **B** is for more extensive off-shore cruising.

Kit A

Impeller Kit
Heat Exchanger Gasket
Oil Filter
Drive Belt
Zinc Anodes
Spark Plugs

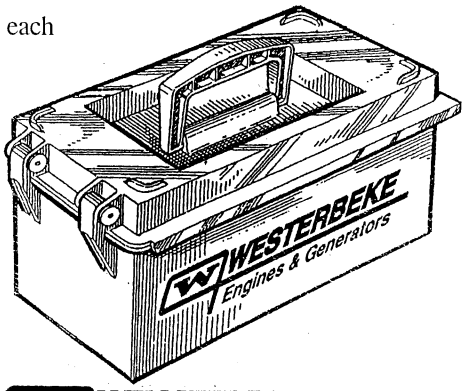

Kit B

Impeller Kit
Water Pump Repair Kit
Thermostat Kit
Zinc Anodes
Complete Gasket Kit
Heat Exchanger Gaskett
Oil Filter
Drive Belt
Spark Plugs

WESTERBEKE
Engines & Generators

WESTERBEKE GENERATORS

EFI Low-CO

WESTERBEKE CORPORATION • MYLES STANDISH INDUSTRIAL PARK
150 JOHN HANCOCK ROAD, TAUNTON, MA 02780-7319 U.S.A.
TEL: (508) 823-7677 • FAX: (508) 884-9688 • Website: www.westerbeke.com

1176-10/2013